Remington®

2011
LAW ENFORCEMENT PRODUCTS
FOR AUTHORIZED STATE & LOCAL LAW ENFORCEMENT AGENCIES

MODEL 870P™ POLICE PUMP-ACTION SHOTGUNS

The nation's leading defender. For a half century, the Remington® Model 870P™ has been the pump shotgun of choice for government agencies. With over 10 million produced to date, it remains the standard by which all pump actions are measured. Its dual, non-binding action bars deliver ultra-smooth, reliable cycling. The ultimate pump shotgun, the Model 870P™ stands the test of time, extreme conditions and duty.

Model 870P™ with Wilson Combat®/XS® Sight System, Ghost Ring sights, Knoxx® SpecOps™ stock and Parkerized finish (Order #24591)

FEATURES

- » Non-binding twin action bars provide smoothest/surest pump operation
- » Receiver milled from solid block of steel
- » 3" chambers accept all 2 3/4" and 3" 12 gauge shells
- » Steel-lined/grooved fore-end for a stronger grip
- » Breechblock locks into barrel extension for strength and consistent head space
- » Balanced sear and inertia firing pin prevents discharge unless action is closed and trigger pulled
- » Flexitab™ feeding system prevents a misfeed from jamming the shotgun
- » Cross-bolt safety
- » Sling swivel studs
- » Optional engraved insignia and property marks available

Receivers machined from a solid, 8 lb. block of ordnance-grade steel define ruggedness.

MODEL 870P™

18" or 20" barrels • SpeedFeed® IV recoil absorbing stock version with two magazine tubes that hold 4 shells • SpeedFeed® synthetic solid stock and fore-end duplicates the weight and dimensions of factory wood stocks • Parkerized finish • Multiple sight options available • 2-shot extension available on some standard models • Cylinder, Improved Cylinder or Modified choke

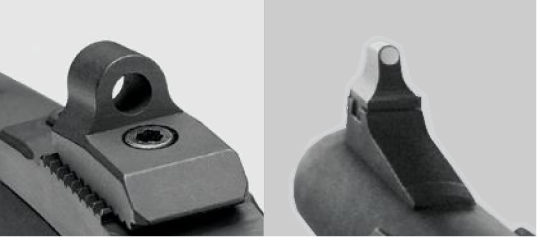

Wilson Combat® Ghost Ring rear sight and XS® front sight post

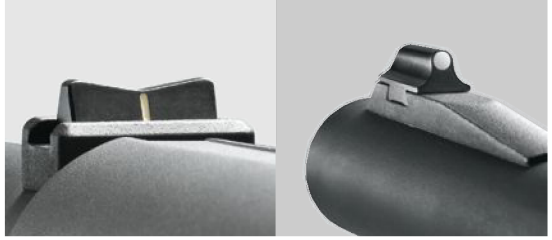

Low-profile rifle sights

Model 870P™ with Rifle sights and SpeedFeed® standard stock (Order #24417)

Model 870P™ 14" barrel, low profile sights, pistol grip and Parkerized finish (Order #24453)

Model 870P™ 14" barrel, low profile sights, Parkerized finish and tactical light fore-end (Order #27579)

MODEL 870P™

14" barrel with modified choke reduces the overall length for an ideal entry shotgun • Parkerized finish • Multiple sight options available • Less-lethal application shotgun available with blaze orange synthetic SpeedFeed® stock and fore-end • Magazine extension available • 18" barrel with cylinder choke

Magazine Extension Kits

Twin Action Bars

NO ONE OFFERS SO MUCH VERSATILITY TO THE U.S. GOVERNMENT AGENCIES.

Your Remington® Model 870™ can be custom-matched to any tactical situation thanks to our incredible array of stocks, magazines, sighting and accessory options. Add magazine capacity, adjust your stock's length of pull, reduce felt recoil, add a flashlight – there's more, and they're all to maximize your effectiveness in the field.

- *RECEIVERS – drilled and tapped for optional MCS™ Picatinny rail*
- *SPEEDFEED® STOCKS – standard & pistol grip, with and without shell wells, 13" & 14" LOP, less-lethal orange, green or black*
- *ADVANCED TECHNOLOGY STOCKS – top and side folding, tactical 6-position collapsible*
- *BUTLER CREEK® STOCKS – side folding stock*
- *KNOXX® STOCKS – SpecOps™ NRS™ recoil-reducing/telescoping, CompStock™ recoil-reducing, and BreachersGrip™ (pistol grip only)*
- *FORE-ENDS – SpeedFeed® and Surefire® tactical light*
- *SIGHTS* – Wilson Combat® Ghost Ring/ XS® front bead sights & low-profile rifle sights (tritium available)*
- *MAGAZINE EXTENSIONS – Remington 2- and 3-shot & Wilson Combat® 1-shot*
- *SLINGS – Tactical or Standard*

**Sights subject to availability.*

Remington®
LAW ENFORCEMENT PRODUCTS

www.remingtonle.com

MODEL 870P™ POLICE SHOTGUNS

Flawless tactical decisions. Remington® is committed to providing multiple options for the various critical tasks of law enforcement officers. The Model 870P,™ Model 870P™ MAX and Model 11-87P™ are all business, leading the field in reliable function and tactically specialized features. All are rugged, smooth-shooting firearms proven in the most demanding situations.

MODEL 870P™

The most traditional Model 870P™ Police Shotguns have a walnut stock and fore-end with a blued or Parkerized metal finish. The Model 870P's receiver is machined from a solid block of ordnance-grade steel for the longest possible service life.

Walnut wood stock • 18" or 20" barrels • Parkerized or blued finishes • Parkerized versions come with optional 2-shot or 3-shot extensions • Multiple sight options available • Improved cylinder choke

Model 11-87P™
with Ghost Ring Sight
(Order #29849)

Model 11-87P™
14" barrel with Rifle Sights
(Order #29847)

Model 870P™ MAX
(Order #24971)

MODEL 870P™ MAX

True to its name, the Model 870P™ MAX Police Shotgun provides maximum options for a huge range of tactical scenarios. Whether it's breaching a door or lighting a dark corner, your Model 870P™ MAX is rigged to perform. Feel the confidence, perform flawlessly.

18" barrel with Parkerized finish • Wilson Combat® XS® Sight System, Ghost Ring Sights • SpeedFeed® IV-S full pistol grip buttstock • 13" length of pull for ease of handling • Surefire® tactical fore-end flashlight with momentary pressure pad and toggle switch ON/OFF applications • 2-shot magazine extension tube • Improved cylinder choke

Model 870P™ with wood stock, bead sight and Parkerized finish
(Order #24899)

MODEL 11-87P™ SEMI-AUTOMATIC

The Model 11-87P™ gas-operated, semi-automatic shotgun embodies ultra-reliable function for all law enforcement applications. Its wealth of specialized features includes 14" and 18" interchangeable barrels and rugged Parkerized finish. It's a leading-edge autoloader optimized for duty.

Receiver machined from 8 lb. solid block of ordnance-grade steel • Bead, Rifle or Wilson Combat® Ghost Ring/XS® Sight System • Magnum 2 ¾" and 3" capability • Tough, black, non-reflective synthetic stocks • Parkerized finish • Soft recoil of the Model 11-87™ gas system • Magazine extensions available • Extended carrier release • Breechblock locks into barrel extension • Cross-bolt safety • Sling swivel studs • Optional engraving with insignia and/or property marks available

LAW ENFORCEMENT SHOTGUN BUILD ROOM. Remington® is ready to meet your department's needs for specialized features and options, all in a fast order-completion time frame. We've taken the next step to put what you need in your hands as soon as possible (a volume minimum may be required).

Optional engraving with insignia and/or property marks.

Remington® LAW ENFORCEMENT PRODUCTS

www.remingtonle.com

MODEL 870™ MODULAR COMBAT SYSTEM (MCS™) SHOTGUN

Honing the leading edge. The ability to adapt to the constantly evolving urban battlefield has become a necessary trait of all government agencies. The Model 870™ Modular Combat System (MCS™) was built with this fact in mind. Our focus remains building the most solid and dependable tactical weapons available today.

MODEL 870™ MODULAR COMBAT SYSTEM (MCS™)

Multiple specialized tactical shotguns in one, the Model 870™ Modular Combat System (MCS™) is the ultimate choice for virtually any close-range scenario. Modifications are made rapidly without tools thanks to the REM™ LOC Quick-Change Stock System, truly a revolutionary design for professionals who need to adapt on the fly.

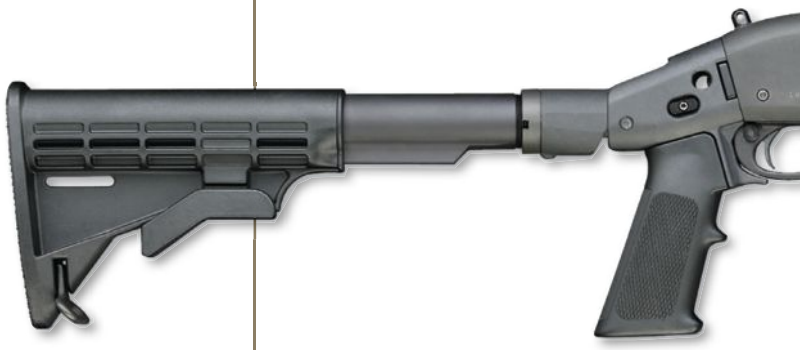

MULTIPLE SHOTGUNS IN ONE

Breaching shotgun with 10" barrel with cylinder choke, pistol grip only, and 4-shell capacity • Close-Quarter Combat (CQB) shotgun with 14" barrel and choke tubes, pistol grip stock, and 6-shell capacity • Shotgun with 18" barrel and choke tubes, pistol grip stock, and 7-shell capacity • Accessory rail for optics • V-Tac MK1 sling included • Comes with cleaning rod (also acts as a magazine spring guide when assembling) • Two detachable shell carriers

10" Breacher Shotgun also available separately

Model 870™ MCS™ breaching shotgun with 10" barrel (Order #24973)

MODEL 870™ BREACHER.

Extremely compact and built on the most trusted pump action of all time, the Model 870™ MCS™ breaching shotgun features a 10" cylinder bore breaching barrel and a Pachmayr® pistol grip for efficiency and control. It has a 3-shot tube magazine capacity, plus one in the chamber, with an overall length of 20 ¼".

Model 870™ MCS™ shotgun with 18" barrel (Order #24973)

Model 870™ MCS™ CQB shotgun with 14" barrel (Order #24973)

SHOTGUN RETENTION DEVICE.

Designed for use with any Remington® tactical shotgun, this device secures your weapon on a belt, body armor and a variety of hard surfaces using a degree of friction that can be adjusted to suit your needs. It's completely ambidextrous and constructed of rugged Kydex for reliability.

CHOOSE YOUR STOCK

Collapsible Stock

– OR –

Pistol Grip Stock

Remington LAW ENFORCEMENT PRODUCTS

www.remingtonle.com

MODEL 870™ POLICE BREACHER SYSTEM

The ultimate choice for virtually any close-range scenario. The Model 870™ Police Breacher System is designed to meet the needs of today's modern law enforcement community. Based on the durable Model 870,™ it is designed to fire any 12 gauge 2 ¾" and 3" load, including standard shotshell, buckshot and breaching rounds. This complete system includes a Parkerized finish, 11.5" barrel and a stand-off with rebar grooves. For efficient transition between loads, a Velcro® side saddle is provided, as well as a retention holster and a button sling and attachment. To complete the package, a soft storage case is provided with dual back-pack capabilities.

Model 870™ Breacher
(Order #82710)

SPECIAL REQUEST FIREARMS

This catalog shows a brief representation of the firearms available from Remington.® Even if we don't currently stock what you're looking for, our skilled craftsmen stand ready to custom-build a firearm or weapon system to your specifications. In fact, many of the world-renowned configurations you see in this catalog were born of special requests from units just like yours. Do not hesitate – we can produce virtually any configuration duty demands. To submit a special request, please visit *www.remingtonle.com/support/contact.htm* to contact your Regional Sales Representative.

Raw materials for building an extractor (above). Drawing of an extractor made to specifications (right).

Lipped fore-end for positive control

11.5" barrel and ported stand-off with rebar grooves

Button sling and attachment.
1 point ambidextrous bungee sling.

POLICE BREACHER SYSTEM

870™ Police complete Door Breacher System, with Parkerized finish • 11.5" barrel with stand-off that comes with rebar grooves • Velcro® side saddle for easy transition between loads • Retention holster for duty belt (Accessory or Standard) • Button sling and attachment • MCS-style receiver with Picatinny rail mounted on top for optics • Soft case for storage with dual backpack capabilities • 4-shot magazine capacity (3 + 1) • Short fore-end with handstop • Low light illuminator on fore-end (optional)

Final inspection of a Model 870P™ in the special build area.

LAW ENFORCEMENT BUCKSHOT

Available in standard and magnum loadings and 5 buckshot sizes: 000, 00, 0, 1 and 4 • Provides reliability, consistency and stopping power • Our 9-pellet 00-Express LE Buckshot created a new standard of pattern performance with the addition of our one-piece compression section Power Piston® wad column, polymer buffering and hard lead pellets • This combination produces patterns 25% tighter than previous buckshot offerings

Remington LAW ENFORCEMENT PRODUCTS

www.remingtonle.com

MODEL 700P™ POLICE BOLT-ACTION RIFLES

No window too narrow. When lives are at stake, precision at the moment of opportunity is everything, which is precisely why Remington® rifles are the No. 1 choice in the line of duty. The world-renowned accuracy of our Model 700™ rifles will make you the master of any long-range tactical situation. When the safety of others rests in your hands, one of these should too.

All Model 700P rifles now come standard with the 40-X™ style adjustable trigger

MODEL 700P™

For those who can accept nothing less than perfection, there is no other choice. The Model 700P™ is the epitome of shot-to-shot consistency and field-proven reliability. It features a receiver machined from ordnance-grade steel flawlessly bedded in the stock. Choose a heavy-contour, 26″ barrel or the agile 20″ fluted barrel (LTR only). Both are free-floated. All rifles feature a tough non-glare Parkerized finish for concealment.

Legendary Model 700™ action • Receiver machined from ordnance-grade steel • Drilled and tapped for scope mounts • Three overlapping rings of solid steel (bolt face, barrel and receiver) • Heavy, free-floating 26″ barrel (20″ fluted barrel on LTR) • Composite stock features with aircraft-grade aluminum bedding block • Non-reflective finish • Sling swivel studs • Magazine with hinged floor plate • Chambered in 223 Remington, 7mm Remington Mag., 308 Win., 300 Win. Mag., 300 Remington Ultra Mag. and 338 Lapua Magnum • LTR chambered in 223 Remington and 308 Win.

Model 700P™ LTR
(Light Tactical Rifle)
(Order #25635)
(308 Win. caliber)

Each Model 700P™ consistently shoots sub MOA from our factory (308 Win., 168 gr., 5 shots @ 100 yds.)

MODEL 700P™ USR™ (URBAN SNIPER RIFLE)

The Urban Sniper Rifle is designed for the modern day operator who needs advanced capabilities to perform his mission. The USR is the pinnacle of Model 700™ tactical rifle development. It begins with the superb Model 700™ LTR, then adds essential tactical components such as a detachable box magazine, MARS rail, variable power optics, adjustable stock, muzzle brake, optional sound suppressor and bipod.

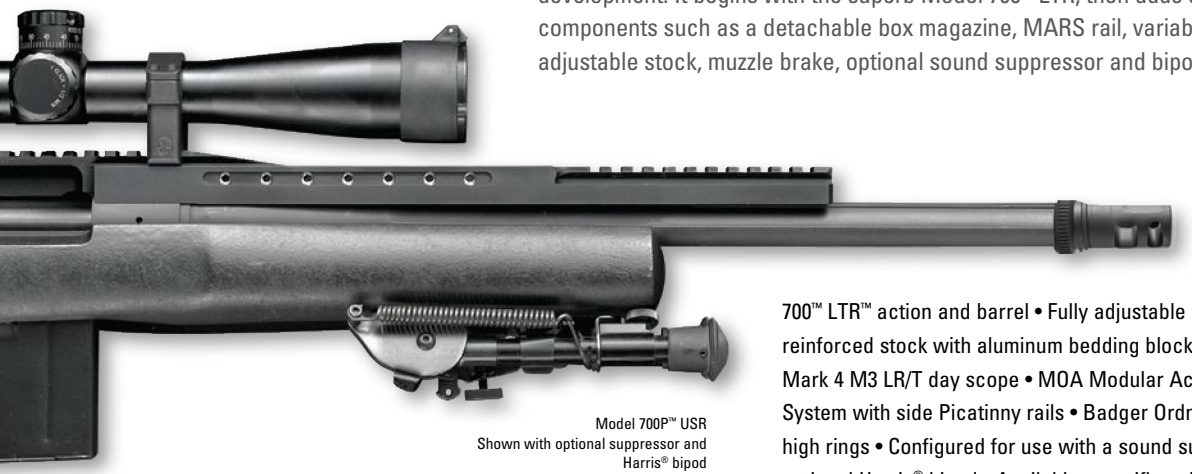

Model 700P™ USR
Shown with optional suppressor and Harris® bipod
(Order #86450)
(.308 Win. caliber/rifle only)

700™ LTR™ action and barrel • Fully adjustable aramid fiber reinforced stock with aluminum bedding block • Leupold® 3.5-10x Mark 4 M3 LR/T day scope • MOA Modular Accessory Rail System with side Picatinny rails • Badger Ordnance® steel 30mm high rings • Configured for use with a sound suppressor and optional Harris® bipod • Available as a rifle only or full kit

Remington LAW ENFORCEMENT PRODUCTS

www.remingtonle.com

MODEL 700P™ TACTICAL WEAPON SYSTEM

For those who can accept nothing less than perfection, there is no other choice. The Model 700P™ is the epitome of shot-to-shot consistency and field-proven reliability. It features a receiver machined from ordnance-grade steel flawlessly bedded in your stock. Choose a heavy-contour, 26" barrel or the agile 20" fluted barrel (LTR™ only). Both are free-floated. All rifles feature a tough non-glare Parkerized finish for concealment.

MODEL 700P™ TWS™ (TACTICAL WEAPON SYSTEM)

Legendary Model 700™ action • Receiver machined from ordnance-grade steel (bolt face, barrel and receiver) • Heavy, free-floating 26" barrel • Composite stock features an aircraft-grade aluminum bedding block • Non-reflective Parkerized finish • Sling swivel studs (two in fore-arm with one on buttstock) • Magazine with hinged floor plate • Standard 40-X™ style adjustable trigger • Badger Ordnance® base and rings • Leupold® Mark 4 3.5-10x 40mm LR/T M1 scope with mil-dot reticle • Harris® bipod • Pelican® hard case • Chambered in 308 Win.

Badger Ordnance®
scope rings and base

MODEL 700P™ AND MODEL 700P™ LTR™ TWS® (TACTICAL WEAPON SYSTEM)

are the Total Sniper Rifle Packages.

Model 700P™ TWS™
(Tactical Weapon System)
(Order #25711)

Complete package includes:

- *Leupold® 3.5-10x LR/T with range finding reticle*
- *Badger Ordnance® 30mm steel rings*
- *Badger Ordnance® steel one-piece Picatinny base*
- *Butler Creek® flip-up lens covers*
- *Harris® 1A2 bipod*
- *Uncle Mike's® 1" Quick-Adjust™ sling with swivels*
- *Pelican® hard case*

Model 700P™ LTR™ TWS™
(Tactical Weapon System)
(Order #25635)

MODEL 700P™ LTR™ (LIGHT TACTICAL RIFLE) TWS™

Legendary Model 700™ action • Receiver machined from ordnance-grade steel (bolt face, barrel and receiver) • Heavy, free-floating 20" fluted barrel • Composite stock features an aircraft-grade aluminum bedding block • Non-reflective Parkerized finish • Sling swivel studs (two in fore-arm with one on buttstock) • Magazine with hinged floor plate • Standard 40-X™ style adjustable trigger • Chambered in 308 Win.

Remington LAW ENFORCEMENT PRODUCTS

www.remingtonle.com

M24 SNIPER WEAPON SYSTEM

Systematically eliminating all variables. The M24 is based on the legendary Model 700™ and 40-X™ rifles. Its unmatched accuracy and reliability have made it the standard in long-range tactical situations, and our Sniper Weapon Systems make outfitting your operation as efficient and simple as possible. From the basic M24 Sniper System – the standard for the U.S. Army since 1988 – to the super-advanced M24A3 package, we include the world-famous rifle and all the premium, service-proven components you need.

M24 SNIPER WEAPON SYSTEM

24" 7.62 cold-hammer-forged 5R Rifling 416 stainless steel barrel • 1:11.25 twist • Composite aramid fiber reinforced stock with aluminum bedding block • 5 round internal magazine • Leupold® Mark 4 M3 10x day optic • Steel rings and 2-piece base • Target-style iron sights • Deployment kit and hard case

THE M24 SNIPER WEAPON SYSTEM comes complete with everything you could want in a Hardigg hard case – Leupold® Mark 4 M3 day optic, OK Weber competition iron sights, deployment kit which includes spare parts and tools, cleaning kit, scope hard case, weapon soft case and system hard case. Includes bipod, sling and user manual.

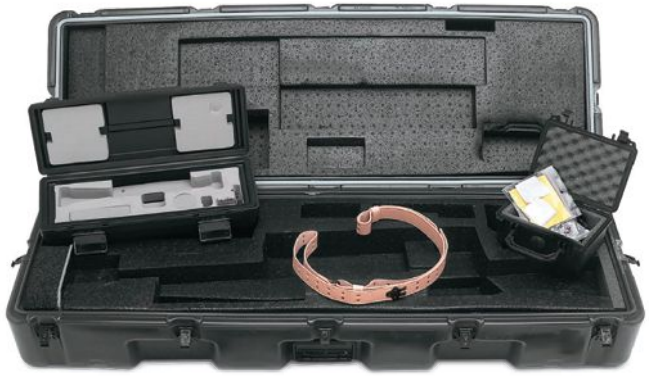

M24A2 Sniper Weapon System
Shown with optional suppressor
(Order #27246)
(Complete System)

M24A2 SNIPER WEAPON SYSTEM

24" 7.62 cold-hammer-forged 5R Rifling 416 stainless steel barrel • 1:11.25 twist • Composite aramid fiber reinforced stock with aluminum bedding block • 5 round detachable magazine • Leupold® Mark 4 M3 LR/T 3.5-10x day optic • Steel rings and one-piece Modular Accessory Rail base • Deployment kit and hard case

M24 Sniper Weapon System
(Order #25679)

Remington®
LAW ENFORCEMENT PRODUCTS

www.remingtonle.com

MODEL 40-XS™ TACTICAL RIFLES AND WEAPON SYSTEMS

Innovative long-range weapon solutions from the Remington Custom Shop. These fully equipped custom rifles are testimony to our entrenchment in the tactical community, superior R&D and full-time commitment to maximizing your skills and training.

40-X™ RIFLES ARE PROVEN CAPABLE OF DELIVERING 3-SHOT ½ MOA PERFORMANCE ON EACH RIFLE THAT LEAVES THE REMINGTON CUSTOM SHOP.

MODEL 40-XS™ TACTICAL RIFLE SYSTEM

The Model 40-XS™ Tactical Rifle System is the ultimate instrument of accuracy. It's built on the time-tested Model 40-X™ action, using the most advanced materials and components available. At the heart of the system is the rock-solid, 416 stainless steel Model 40-X™ action, coated with Remington's proprietary non-reflective black polymer coating for protection and reduced reflectivity.

40-X™ action bedded with custom titanium compound in a McMillan® A5 series stock with adjustable length of pull and comb height • Custom shop button-rifled and hand-lapped 40-X™ barrel • Chambered in 308 Win. (1:12" twist) or 300 Win. Mag. • 40-X™ externally adjustable trigger • Harris® bipod with quick adjust swivel lock • Leupold® Mark 4 3.5 -10x40mm long range M1 scope with mil-dot reticle • Badger Ordnance® all-steel 8-40mm Picatinny scope rail and heavy tactical rings • Proved capable of delivering ½ MOA on each rifle that leaves the Remington Custom Shop • Heavy duty, all-steel trigger guard • Turner® AWS tactical sling with swivels • Pelican® hard case • Magazine box welded to receiver • Bolt handle is double pinned to bolt

A tough, durable, hard case comes with each 40-XS rifle, providing individual sections for all parts and accessories.

Model 40-XB™ Tactical
(Order #27174)

MODEL 40-XB™ TACTICAL

Built on the venerable 40-X™ action, the Model 40-XB™ features an externally adjustable 40-X™ trigger. The 27 ¼" stainless steel barrel is button rifled with 1:12 twist and features three longitudinal flutes for weight reduction and rapid cooling. Its coating adds extreme protection from corrosion and abuse. The barreled action is set into an aluminum bedding block. A green and black tactical stock with a vertical pistol grip for added stability and maneuverability.

Model 40-XS™ Tactical Rifle System
308 Win.
(Rifle: Order #27225)
(System: Order #27227)

300 Win.
(Rifle: Order #87882)
(System: Order #87884)

MODEL 40-XS™ 338 TACTICAL RIFLE

The ultimate long-range "built-to-order" tactical rifle. 338 Lapua® Magnum cartridge capable of accuracy past 1,000 meters. This rifle is built with the time-proven 40-X™ action, 26" stainless steel 1:10 twist barrel chambered in 338 Lapua Magnum, integral/removable muzzle brake, 40-X™ externally adjustable trigger, hand bedded into a McMillan® A5 stock.

Proven 40-X™ action • Button-rifled and hand-lapped 40-X™ barrel • Remington® bolt with external AR style extractor • Barrel threaded for removable muzzle brake • 40-X™ trigger • McMillan A5 adjustable stock • Titanium custom bedded • Detachable magazine box system

Model 40-XS™ Tactical Rifle 338
(Rifle: Order #27249)

MODEL 40-X™ ACTION.

Arguably the most accurate bolt platform ever created, the 40-X™ action has dominated benchrest competitions since its creation in 1962. Each is fully blueprinted in our Custom Shop to deliver the pinnacle of shot-to-shot consistency, and to create a solid, exacting piece of machinery best compared to surgical equipment.

40-X™ TRIGGER.

Crafted to unprecedented tolerances with a single-minded purpose: to deliver the most crisp, precise trigger pull in the world today. An external adjustment with a special 2-oz. trigger is available as an option on competition models.

CUSTOM TACTICAL

www.remingtoncustom.com

MODEL XM3 TACTICAL WEAPON SYSTEM

Precision on demand. Model XM3 rifles are a far-reaching testimony to our entrenchment in the tactical community, superior R&D and full-time commitment to augmenting a trained marksman's skills. The Model XM3 Rifle System, chambered for 308 Win., is fully rigged and ready to launch sub-MOA strikes out to 1,000 yards. Incorporating today's most advanced technologies, it is an unparalleled fusion of compact sizing, lightweight, accuracy and range designed from the ground up by Lt. Col. USMC Ret Norman A Chandler II of IBA under contract with the Defense Advanced Research Projects Agency (DARPA).

MODEL XM3 TACTICAL SYSTEM

An 18 ½" stainless steel (mil-gauged) Hart barrel featuring a 1:10 twist with six grooves is mounted to a legendary 40-X™ receiver • Match chambered and threaded to accept a Surefire® muzzle brake/sound suppressor adapter • Nightforce NX3 3.5-15x 50mm illuminated mil-dot reticle scope is the ultimate in target acquisition • Lightweight stock by McMillan with removable length of pull spacers, plus forward grooves on the fore-end for a sure grip • UNS mount for night vision mounting • Proven dependable after 500 hours of saltwater testing, the Man-O-War metal finish is available in Black and OD Green

MODEL 40-X™ TDR (TARGET DEPLOYMENT RIFLE)

A premium, match, hand-lapped stainless steel barrel is flawlessly mated to our legendary 40-X™ action for the pinnacle of shot-to-shot consistency. Also features a custom-tuned 40-X™ match trigger; one-piece, heavy-duty steel trigger guard; heavy stainless recoil lug; 3-barreled action and stock colors; Picatinny mounting system with 20 MOA built in, threaded AAC silencer adaptor/muzzle brake.

MODEL 40-X™ TIR (TARGET INTERDICTION RIFLE)

Features a black H-S PST25 tactical/adjustable stock for precise adjustment and a premium, match-grade stainless steel barrel that is hand lapped to unrivaled standards for precision. A custom-tuned 40-X™ match trigger, heavy stainless recoil lug, integral mounting system and built-in threaded muzzle brake/silencer adaptor complete the Model 40-X™ TIR's super-accurate components. 3-shot half-MOA precision is guaranteed at 100 yards; 3-barreled action colors available.

Model 40-X™ TDR
(Order #87912 shown)

9 color combinations available

Model XM3 Tactical Rifle System
(Titanium: Order #86433)
(Steel: Order #86434)

A NEW STANDARD FOR TACTICAL PRECISION. The Model 40-X™ will deliver 0.50" maximum 3-shot groups at 100 yards. Each Model 40-X™ is hand built in the Remington® Custom Shop on our world-famous 40-X™ action. Barreled actions are coated with our proprietary non-reflective polymer in Black, OD Green or Flat Dark Earth (F.D.E.) for superior protection and shipped within our custom soft case inside our lockable hard case.

Remington® Premier® Match, Match King BTHP, 168 gr. – 3 shots, 100 yds., half-MOA

Model 40-X™ TIR
(Black: Order #87920)
(O.D. Green: Order #87921)
(F.D.E.: Order #87922)

CUSTOM TACTICAL

www.remingtoncustom.com

PREMIER® RIFLE AMMUNITION

Duty and training rifle ammunition. Remington® produces a full line of duty and special application ammunition with superb MOA accuracy, consistent point-of-aim/point-of-impact, unbeatable reliability and superior terminal ballistics. Every cartridge combines the highest-quality brass and bullets with specially blended powders. When lives depend on your first shot, you can trust Remington Premier® rifle ammunition.

REMINGTON® PREMIER® CORE-LOKT® ULTRA BONDED™

Lead core metallurgically adheres to a progressively tapered jacket, specifically designed to control expansion • Combines maximum penetration, controlled 1.8x expansion, and 95% original weight retention • Bullet maintains maximum integrity and stays on target through tough barriers • *Available in 223 Remington, 308 Win., 7mm Remington Mag., 300 Win. Mag., 300 Remington Mag., 30-06 Sprg., 300 Remington SA Ultra Mag. and others* • Made in the USA

REMINGTON® PREMIER® ACCUTIP

Precision-engineered deformation-resistant polymer tip provides match type accuracy, positive feed and function reliability, and maximum ballistic coefficient • Effectively reduces the chance of over-penetration and ricochet while maximizing the energy transfer • *Available in 223 Remington, 7mm Remington Mag., 308 Win., 30-06 Sprg., 300 Win. Mag. and others* • Made in the USA

REMINGTON® PREMIER® SCIROCCO BONDED

Most advanced polymer-tipped, boat-tailed bullet available • Sleek bullet profile produces remarkably flat trajectories • Precise jacket concentricity produces superb accuracy • Progressively tapered, heavy-based, pure copper jacket is bonded to the lead core to retain over 75% of its weight at all velocities • *Available in 7mm Remington Mag., 308 Win., 30-06 Sprg., 300 Win. Mag., 300 Remington Ultra Mag. and others* • Made in the USA

223 Rem 308 Match 338 Lapua

REMINGTON® PREMIER® MATCH

Loaded with Sierra® MatchKing® boat-tail bullets, high-grade primers, and specially blended powders for consistent velocity and exceptional accuracy • *Available in 308 Win. – 168 and 175 gr., 223 Remington – 69 and 77 gr., and 6.8mm Remington SPC – 115 gr.* • *Other Premier Match loads are available in 223 Remington – 62 gr. HP Match and 338 Lapua Magnum – 250 gr. Scenar Match*

PISTOL & REVOLVER DUTY AMMUNITION

All cartridges assembled from premium components • Meticulous quality control to ensure reliability • Available in a wide variety of calibers, bullet types and loads to meet your requirements

9mm Luger 380 Auto 38 Special 357 Magnum

357 SIG 40 S&W 10mm Auto 45 GAP 45 Auto

Remington® LAW ENFORCEMENT PRODUCTS

www.remingtonle.com

GOLDEN SABER® HPJ (HIGH-PERFORMANCE JACKET)
HANDGUN DUTY AMMUNITION

Terminal performance that cuts three ways. Golden Saber,® the ultimate in street-proven handgun rounds. Our three key design features come together on-target for rapid, controlled expansion; deep penetration; max weight retention and exceptional accuracy. Its unique hollow-point design delivers a previously unattainable level of terminal performance.

JACKET NOSE CUT » Forms a folded spiral pattern that curls one edge of each jacket petal inward, completely cutting through the lead core into the hollow point • This causes early cavity failure and starts controlled expansion, while still conserving energy for superior penetration • This design ensures positive expansion even at lower velocities

HIGH-PERFORMANCE BRASS JACKET » Made entirely of thicker and stiffer cartridge brass instead of standard copper gilding metal • Jacket petals open rapidly to form shoulders that support the mushrooming core, which creates an aggressive frontal area (at least 1.6 times the bullet diameter) over a longer distance in the wound cavity

DRIVING BAND™ » Located at the bullet's rear, the Driving Band is the larger base diameter behind the front section of bore diameter • This configuration mechanically locks core to jacket to prevent core/jacket separation and reduces rifling contact friction for optimum muzzle velocity • Also, the reduced front diameter allows the bullet to align precisely in the bore before the band engages the rifling to produce true match-grade accuracy and higher velocity conservation

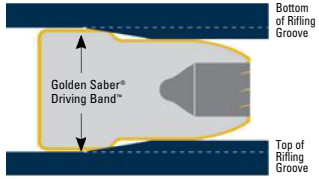

PUNCHES THROUGH BARRIERS AND DELIVERS SUPERIOR TERMINAL PERFORMANCE BEYOND.

Sequence of high-speed photography showing the superior performance of Golden Saber® HPJ Bonded™ through auto glass. Shot was set up to mimic one taken from the left front quarter of a vehicle. FRAME 1: 230-gr., 45 caliber Golden Saber® Bonded™ bullet impacts typical windshield glass. FRAMES 2-4: Bullet passes through windshield. FRAME 5: Emerges from the glass intact. Jacket and core held together through ASI ¼-inch laminated safety glass.

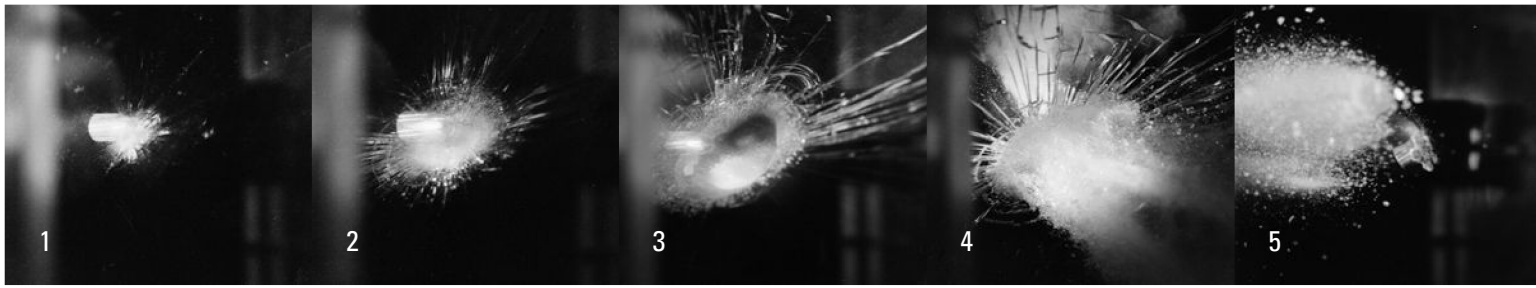

GOLDEN SABER® BONDED™ »

All the revolutionary features that make Golden Saber® rounds the leading edge in tactical handgun rounds, along with the unmatched barrier-penetration performance of our special bonded-bullet design.

The standard for barrier-penetration performance • Through exclusive Remington® process, lead core hot-bonded to brass jacket • Exceptional weight retention – up to 97% through auto glass • Reduced bullet nose diameter for precise bore alignment and match-grade accuracy • Requires less energy to initiate expansion • Jacket stiffness and wall thickness optimized to eliminate over-expansion, thus maximizing penetration • *Available in 357 SIG, 9mm Luger, 40 S&W and 45 Auto* • Made in the USA

9mm Luger, 147-gr. Auto Glass @ 10' 1.5x expansion

40 S&W, 180-gr. Auto Glass @ 10' 1.6x expansion

45 Auto, 230-gr. Auto Glass @ 10' 1.4x expansion

Golden Saber® HPJ Bonded™ 9mm Luger, 147-gr., 25 yds. 10 Shots, .9"

Golden Saber® HPJ Bonded™ bullets have the same industry-exclusive Driving Band™ profile that centers the bullet perfectly in the bore as it moves into the rifling. This results in match-grade accuracy and higher velocity conservation.

GOLDEN SABER® HPJ (HIGH-PERFORMANCE JACKET) »

Industry-exclusive Driving Band™ • Jacket made entirely of cartridge brass • Nickel-plated cases for more reliable feeding • Waterproofed primers and case mouths provide max integrity in all weather conditions • Virtually 100% weight retention • Precise hollow-point cavity design maximizes penetration by minimizing lead core deformation • Flash-suppressed powders allow faster low-light target reacquisition • Reduced bullet nose diameter for precise bore alignment and match-grade accuracy • Optimum barrier penetration and expansion through a full range of accepted barrier tests • Available in 380 Auto, 9mm Luger, 38 Special, 357 Mag., 40 S&W and 45 Auto • Made in the USA

This series of photos shows the totally controlled and extremely uniform expansion of Golden Saber® HPJ bullets.

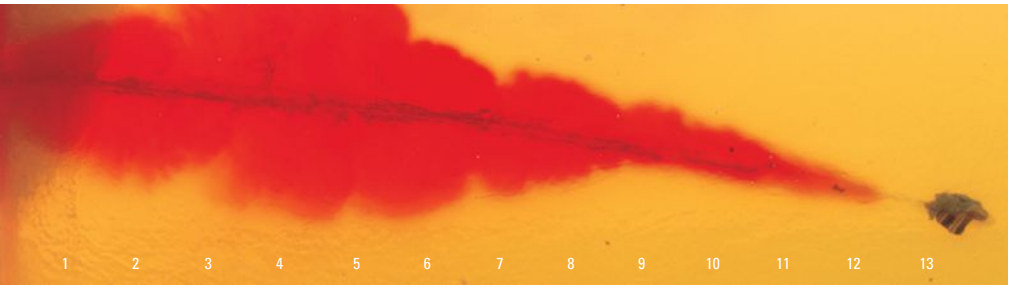

A block of gelatin placed 10" beyond the auto-glass setup to catch the bullet. Even after smashing through safety glass, the 45-cal. Golden Saber® Bonded™ still delivers a large-volume stretch cavity with over 12" of penetration.

Remington® LAW ENFORCEMENT PRODUCTS

www.remingtonle.com

GOLDEN SABER® HPJ (HIGH-PERFORMANCE JACKET)
HANDGUN BARRIER TEST RESULTS

GOLDEN SABER® BONDED™

HEAVY CLOTHING @ 10 FEET

9MM LUGER
» Weight: 147-gr.
» Penetration: 16.9″
» Expansion: .58″ (1.6x)
» Weight Retention: 100%

40 S&W
» Weight: 180-gr.
» Penetration: 14.4″
» Expansion: .67″ (1.7x)
» Weight Retention: 100%

45 AUTO
» Weight 230-gr.
» Penetration: 16.1″
» Expansion: .71″ (1.6x)
» Weight Retention: 100%

AUTO GLASS @ 10 FEET

9MM LUGER
» Weight: 147-gr.
» Penetration: 12.1″
» Expansion: .55″ (1.6x)
» Weight Retention: 92%

40 S&W
» Weight: 180-gr.
» Penetration: 11.2″
» Expansion: .62″ (1.6x)
» Weight Retention: 97%

45 AUTO
» Weight 230-gr.
» Penetration: 12.5″
» Expansion: .63″ (1.4x)
» Weight Retention: 96%

WALLBOARD @ 10 FEET

9MM LUGER (Wallboard)
» Weight: 147-gr.
» Penetration: 13.8″
» Expansion: .60″ (1.7x)
» Weight Retention: 100%

STEEL @ 10 FEET

9MM LUGER (Steel)
» Weight: 147-gr.
» Penetration: 21.4″
» Expansion: .42″ (1.2x)
» Weight Retention: 100%

GOLDEN SABER® HPJ (HIGH-PERFORMANCE JACKET)

HEAVY CLOTHING @ 10 FEET

357 MAGNUM
» Weight: 125-gr.
» Penetration: 15.7″
» Expansion: .59″ (1.7x)
» Weight Retention: 100%

9MM LUGER
» Weight: 124-gr.
» Penetration: 11.9″
» Expansion: .62″ (1.8x)
» Weight Retention: 99.9%

40 S&W
» Weight: 180-gr.
» Penetration: 13.0″
» Expansion: .68″ (1.7x)
» Weight Retention: 99.9%

45 AUTO
» Weight 230-gr.
» Penetration: 18.8″
» Expansion: .73″ (1.6x)
» Weight Retention: 99.8%

HEAVY CLOTHING @ 20 YARDS

9MM LUGER
» Weight: 147-gr.
» Penetration: 13.2″
» Expansion: .66″ (1.9x)
» Weight Retention: 100%

WALLBOARD @ 10 FEET

45 AUTO
» Weight 230-gr.
» Penetration: 15.3″
» Expansion: .72″ (1.6x)
» Weight Retention: 99.7%

STEEL @ 10 FEET

40 S&W
» Weight 180-gr.
» Penetration: 16.3″
» Expansion: .51″ (1.3x)
» Weight Retention: 99.7%

BALLISTIC PERFORMANCE
40 S&W 165-GR.
GOLDEN SABER® HPJ
MUZZLE FLASH COMPARISON

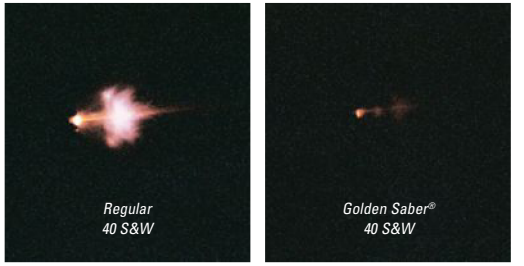

All Golden Saber® powders are treated with a chemical flash suppressant that retards flame propagation. This minimizes night blindness for the shooter while helping to conceal location.

GOLDEN SABER® BONDED

9mm Luger	Index Number – GSB9MMD	RAMAC – 29351
Primer	1 ½	
Load	9mm Luger +P	
Bullet Weight/Style	124-gr. BJHP-Bonded	
Jacket Material	Brass (Copper alloy 260)	
Core Material	100% Lead	
Muzzle Velocity	1180 fps using a 4" SAAMI standard test barrel	
Muzzle Energy	384 ft.-lbs.	
Accuracy	2.0" Max. avg. extreme spread @ 25 yards (Three 5-round groups using a universal receiver test system)	
Bullet Performance	4" pistol, auto glass @ 10 ft., average values Penetration: 11.3 inches Expansion: .54 inch dia. (1.7x) Weight Retention: 90%	

9mm Luger	Index Number – GSB9MMC	RAMAC – 29353
Primer	1 ½	
Load	Standard	
Bullet Weight/Style	147-gr. BJHP-Bonded	
Jacket Material	Brass (Copper alloy 260)	
Core Material	100% Lead	
Muzzle Velocity	990 fps using a 4" SAAMI standard test barrel	
Muzzle Energy	320 ft.-lbs.	
Accuracy	2.0" Max. avg. extreme spread @ 25 yards (Three 5-round groups using a universal receiver test system)	
Bullet Performance	4" pistol, auto glass @ 10 ft., average values Penetration: 11.3 inches Expansion: .54 inch dia. (1.7x) Weight Retention: 90%	

357 SIG	Index Number – GSB357SB	RAMAC – 29408
Primer	5 ½	
Load	Standard	
Bullet Weight/Style	125-gr. BJHP-Bonded	
Jacket Material	Brass (Copper alloy 260)	
Core Material	99.25% Lead, .75% Antimony	
Muzzle Velocity	1350 fps using a 4" SAAMI standard test barrel	
Muzzle Energy	506 ft.-lbs.	
Accuracy	2.0" Max. avg. extreme spread @ 25 yards (Three 5-round groups using a universal receiver test system)	
Bullet Performance	4" pistol, auto glass @ 10 ft., average values Penetration: 12.3 inches Expansion: .58 inch dia. (1.6x) Weight Retention: 82%	

40 S&W	Index Number – GSB40SWA	RAMAC – 29366
Primer	5 ½	
Load	Standard	
Bullet Weight/Style	165-gr. BJHP-Bonded	
Jacket Material	Brass (Copper alloy 260)	
Core Material	100% Lead	
Muzzle Velocity	1150 fps using a 4" SAAMI standard test barrel	
Muzzle Energy	485 ft.-lbs.	
Accuracy	2.0" Max. avg. extreme spread @ 25 yards (Three 5-round groups using a universal receiver test system)	
Bullet Performance	4" pistol, auto glass @ 10 ft., average values Penetration: 11.4 inches Expansion: .71 inch dia. (1.8x) Weight Retention: 92%	

40 S&W	Index Number – GSB40SWB	RAMAC – 29436
Primer	5 ½	
Load	Standard	
Bullet Weight/Style	180-gr. BJHP-Bonded	
Jacket Material	Brass (Copper alloy 260)	
Core Material	99.25% Lead, .75% Antimony	
Muzzle Velocity	1015 fps using a 4" SAAMI standard test barrel	
Muzzle Energy	412 ft.-lbs.	
Accuracy	2.0" Max. avg. extreme spread @ 25 yards (Three 5-round groups using a universal receiver test system)	
Bullet Performance	4" pistol, auto glass @ 10 ft., average values Penetration: 11.2 inches Expansion: .62 inch dia. (1.7x) Weight Retention: 97%	

45 AUTO	Index Number – GSB45APB	RAMAC – 29416
Primer	2 ½	
Load	Standard	
Bullet Weight/Style	230-gr. BJHP-Bonded	
Jacket Material	Brass (Copper alloy 260)	
Core Material	100% Lead	
Muzzle Velocity	875 fps using a 5" SAAMI standard test barrel	
Muzzle Energy	391 ft.-lbs.	
Accuracy	2.8" Max. avg. extreme spread @ 50 yards (Three 5-round groups using a universal receiver test system)	
Bullet Performance	5" pistol, auto glass @ 10 ft., average values Penetration: 12.5 inches Expansion: .63 inch dia. (1.4x) Weight Retention: 96%	

45 AUTO	Index Number – GSB45APA	RAMAC – 29414
Primer	2 ½	
Load	Standard	
Bullet Weight/Style	185-gr. BJHP-Bonded	
Jacket Material	Brass (Copper alloy 260)	
Core Material	100% Lead	
Muzzle Velocity	1015 fps using a 5" SAAMI standard test barrel	
Muzzle Energy	534 ft.-lbs.	
Accuracy	2.8" Max. avg. extreme spread @ 25 yards (Three 5-round groups using a universal receiver test system)	
Bullet Performance	4" pistol, auto glass @ 10 ft., average values Penetration: 12.1 inches Expansion: .65 inch dia. (1.4x) Weight Retention: 94%	

GOLDEN SABER® HPJ (HIGH-PERFORMANCE JACKET)

9mm Luger	Index Number – GS9MMC	RAMAC – 29422
Primer	1 ½	
Load	Standard	
Bullet Weight/Style	147-gr. BJHP	
Jacket Material	Brass (Copper alloy 260)	
Core Material	100% Lead	
Muzzle Velocity	990 fps using a 4" SAAMI standard test barrel	
Muzzle Energy	320 ft.-lbs.	
Accuracy	2.0" Max. avg. extreme spread @ 25 yards (Three 5-round groups using a universal receiver test system)	
Bullet Performance	4" pistol, 10% ordnance gelatin @ 10 ft., average values Penetration: 12.8 inches Expansion: .66 inch dia. (1.8x) Weight Retention: 100%	

9mm Luger +P	Index Number – GS9MMD	RAMAC – 29424
Primer	5 ½	
Load	+P	
Bullet Weight/Style	124-gr. BJHP	
Jacket Material	Brass (Copper alloy 260)	
Core Material	99.25% Lead, .75% Antimony	
Muzzle Velocity	1180 fps using a 4" SAAMI standard test barrel	
Muzzle Energy	384 ft.-lbs.	
Accuracy	2.0" Max. avg. extreme spread @ 25 yards (Three 5-round groups using a universal receiver test system)	
Bullet Performance	4" pistol, 10% ordnance gelatin @ 10 ft., average values Penetration: 14.3 inches Expansion: .54 inch dia. (1.5x) Weight Retention: 99.9%	

40 S&W	Index Number – GS40SWA	RAMAC – 29440
Primer	5 ½	
Load	Standard	
Bullet Weight/Style	165-gr. BJHP	
Jacket Material	Brass (Copper alloy 260)	
Core Material	99.25% Lead, .75% Antimony	
Muzzle Velocity	1150 fps using a 4" SAAMI standard test barrel	
Muzzle Energy	485 ft.-lbs.	
Accuracy	2.0" Max. avg. extreme spread @ 25 yards (Three 5-round groups using a universal receiver test system)	
Bullet Performance	4" pistol, 10% ordnance gelatin @ 10 ft., average values Penetration: 14.1 inches Expansion: .60 inch dia. (1.5x) Weight Retention: 100%	

40 S&W	Index Number – GS40SWB	RAMAC – 29442
Primer	5 ½	
Load	Standard	
Bullet Weight/Style	180-gr. BJHP	
Jacket Material	Brass (Copper alloy 260)	
Core Material	99.25% Lead, .75% Antimony	
Muzzle Velocity	1015 fps using a 4" SAAMI standard test barrel	
Muzzle Energy	412 ft.-lbs.	
Accuracy	2.0" Max. avg. extreme spread @ 25 yards (Three 5-round groups using a universal receiver test system)	
Bullet Performance	4" pistol, 10% ordnance gelatin @ 10 ft., average values Penetration: 12.3 inches Expansion: .68 inch dia. (1.7x) Weight Retention: 99.9%	

45 AUTO	Index Number – GS45APA	RAMAC – 29444
Primer	2 ½	
Load	Standard	
Bullet Weight/Style	230-gr. BJHP	
Jacket Material	Brass (Copper alloy 260)	
Core Material	99.25% Lead, .75% Antimony	
Muzzle Velocity	1015 fps using a 5" SAAMI standard test barrel	
Muzzle Energy	423 ft.-lbs.	
Accuracy	2.8" Max. avg. extreme spread @ 50 yards (Three 5-round groups using a universal receiver test system)	
Bullet Performance	5" pistol, 10% ordnance gelatin @ 10 ft., average values Penetration: 14.8 inches Expansion: .60 inch dia. (1.3x) Weight Retention: 100%	

45 AUTO	Index Number – GS45APB	RAMAC – 29448
Primer	2 ½	
Load	Standard	
Bullet Weight/Style	230-gr. BJHP	
Jacket Material	Brass (Copper alloy 260)	
Core Material	100% Lead	
Muzzle Velocity	875 fps using a 5" SAAMI standard test barrel	
Muzzle Energy	391 ft.-lbs.	
Accuracy	2.8" Max. avg. extreme spread @ 50 yards (Three 5-round groups using a universal receiver test system)	
Bullet Performance	5" pistol, 10% ordnance gelatin @ 10 ft., average values Penetration: 15.0 inches Expansion: .71 inch dia. (1.6x) Weight Retention: 100%	

DISINTEGRATOR® LEAD-FREE, REDUCED HAZARD TRAINING AMMUNITION.

Pulverizing previous standards for excellence. The road to flawless execution is paved in Remington® green. That is, empty cases and the powdered remnants of our frangible and specialized training ammunition. No one equips you for perfect practice like Remington.® Exactly why we're the top choice for government agencies everywhere – in the field and on the course.

JACKET-LESS BULLETS BREAK UP INSTANTLY AND COMPLETELY

- No splash back
- No jacket fragments
- No lead residue

DISINTEGRATOR® CTF

Disintegrator® CTF (Copper/Tin Frangible), Lead-Free Sintered Pistol & Revolver ammunition offers the most complete bullet break-up and minimal splash back available in reduced-hazard training ammunition. For your most demanding close-quarter training needs.

The compaction and sintering process used to fuse the copper/tin particles into a Disintegrator® CTF bullet occurs under intense pressure and heat; completely eliminating the need for a jacket to house the bullet core, a departure from other Remington® frangible ammunition designs that use conventional drawn copper or plated jacket materials. The jacket-less Disintegrator® CTF breaks up completely on impact against hard surfaces, leaving dust-sized particles with no jacket fragments, significantly reducing training hazards for students, instructors and range operators.

Disintegrator® CTF particles shot at 10 ft. and 90º

DISINTEGRATOR® PLATED FRANGIBLE

Disintegrator® Lead-Free and Heavy-Metal-Free Plated Frangible Ammo helps provide a reduced hazard range for students, instructors and the environment. Disintegrator® plated frangible bullets feature a high-strength metal particle core completely sealed in a jacket of electroplated copper. Splash-back is greatly reduced when fired against angled surfaces, enhancing student safety at minimal target distances.

Disintegrator® plated particles shot at 10 ft. and 90º

Disintegrator Jacketed Frangible Ammo is our most cost effective frangible training solution. It is used where particle splash-back is not a concern.

DISINTEGRATOR® JACKETED FRANGIBLE

Disintegrator® Jacketed Frangible Ammo is a totally lead-free and heavy-metal-free, frangible training load for realistic, safe and cost-effective training and qualification programs. Bullet construction is a high-strength metal particle core sealed in a jacket that instantly breaks up when impacting steel targets or backstops, leaving harmless metal particles and small pieces of thin jacket.

Available in 9mm Luger +P, 40 S&W and 223 Remington.

Disintegrator® Jacketed particles

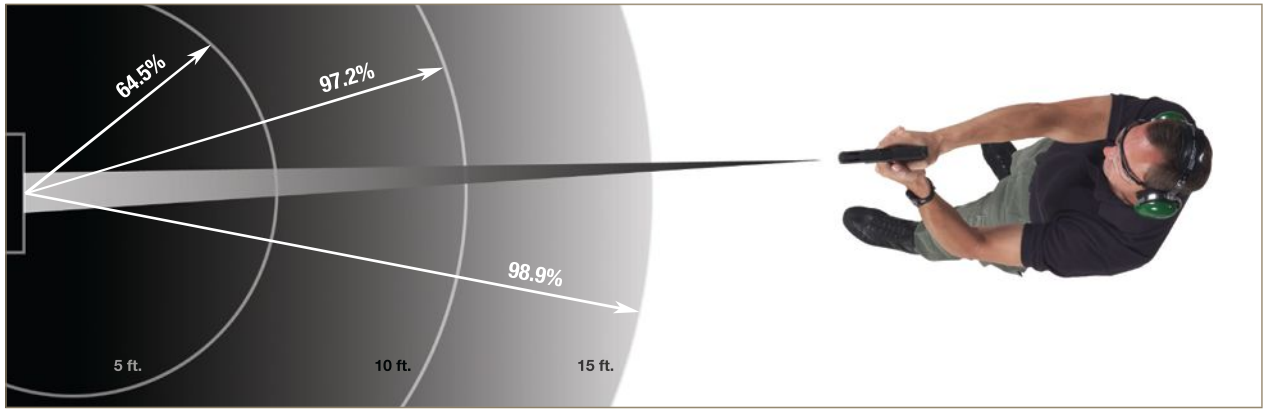

Radius of Particle Splash-Back. With Disintegrator® training ammunition, material splash-back from backstops is virtually eliminated. The extreme frangibility of Disintegrator® bullets allows complete break-up with nothing left but fine particle dust and harmless pieces of copper plate. In testing against a hard steel backstop at a 90-degree angle, 98.9% of the bullet mass fell to the floor at fifteen feet from the backstop.

WHY DISINTEGRATOR® IS THE LEADER IN LEAD-FREE AMMUNITION:

- Completely lead-free and heavy-metal-free round for practice, competition and law enforcement where airborne lead or spent lead recovery is an issue
- Lead-free and heavy-metal-free priming mix provides clean, instantaneous ignition, while special powder blends enhance velocities to simulate the felt recoil and point of impact of standard lead-core bullets
- Superior accuracy is achieved through a precise manufacturing process that produces precise bullet concentricity
- Disintegrator ammunition reduces wear and damage to bullet traps and steel backstops as well as collateral damage to range fixtures
- Nothing is left after impact but harmless metal particles and small pieces of thin copper plate or copper jacket
- Disintegrator bullet profiles are based on field-proven Remington® designs for reliable feed and function in a wide range of firearms
- Disintegrator ammunition is perfect for training to special-duty applications

Remington® LAW ENFORCEMENT PRODUCTS

www.remingtonle.com

En-gauge and immobilize. For close-range tactical scenarios, Remington® 12 gauge ammunition is a clean sweep. Our selection of street-proven slugs and buckshot has been perfected over decades in the field. We match the finest components with rigid standards for quality control to create the only shotgun loads worthy of a trip down a Remington tactical shotgun barrel.

SLUGS 12-GAUGE DUTY SHELLS

12 gauge slugs are available in full power and reduced recoil for duty and training conditions. While the Slugger® Rifled Slugs remain the industry standard, the Reduced Recoil Rifled Slugs generate 45% less recoil than a standard 1-oz. rifled slug. In the field or on the course, Remington provides the perfect slugs for any shotgun duty use.

REDUCED RECOIL RIFLED SLUGS

Specifically engineered to improve a shooter's capabilities with a shotgun • Generate 45% less recoil than a standard 1-oz. rifled slug • Helps during training and encourages shotgun duty use • Point-of-Impact is identical to a standard 1-oz. slug out to 50 yards and only 1 ½" lower at 100 yards • High-density polymer alignment disk under the slug's base produces enhanced accuracy • Waterproof primer for maximum reliability

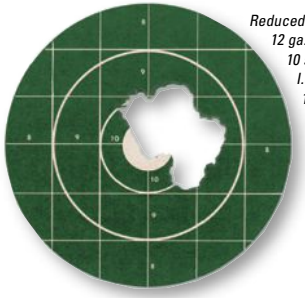

Reduced Recoil Slug
12 ga., 2 ¾", 1-oz. slug,
10 shots, 25 yards,
I.C. Choke,
1,200 FPS

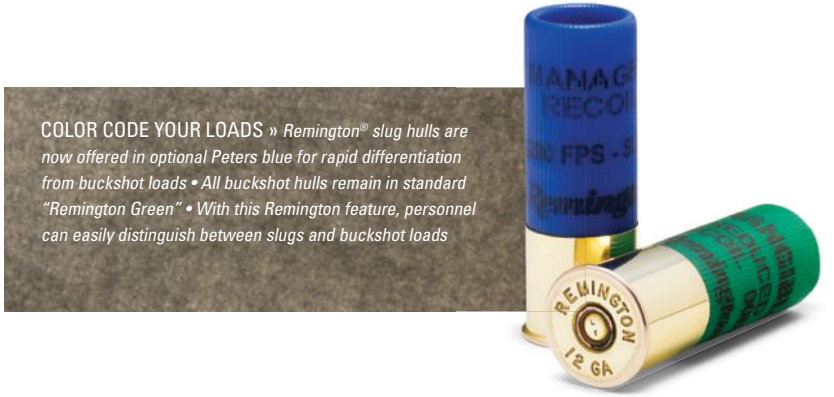

COLOR CODE YOUR LOADS » *Remington® slug hulls are now offered in optional Peters blue for rapid differentiation from buckshot loads • All buckshot hulls remain in standard "Remington Green" • With this Remington feature, personnel can easily distinguish between slugs and buckshot loads*

SLUGGER® RIFLED SLUGS

Larger slug diameter for better gas sealing » High-density polymer disk under the slug produces a perfectly aligned exit from the muzzle for dramatically enhanced accuracy

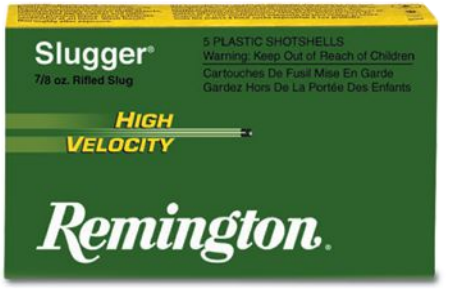

Full Velocity Slugger
12 ga., 2 ¾", 1-oz. slug,
10 shots, 25 yards,
I.C. Choke,
1,560 FPS

FRANGIBLE SABOT SLUGS

Reliable lead-free and heavy-metal-free primer • Lead-free slugs produce instant, complete breakup when impacting steel targets and steel backstops • Optimized powder blends for efficient utilization with minimum unburned residue • Accuracy performance nearly equivalent to conventional loads • Slug fragment splash-back virtually eliminated

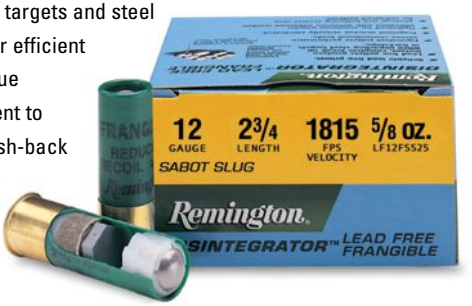

TACTICAL BUCKSHOT 12-GAUGE DUTY SHELLS

TAC 8® 00-BUCKSHOT

A full load 8-pellet 00-Buck that boasts a highly concentrated ½" to ¾" per yard pattern spread • Pattern controlled by utilizing 00-buck with 3% antimony lead and a precisely loaded special shot cup • Waterproof primer and mouth for maximum reliability under harsh environmental conditions

1 ROUND OF TAC 8
fired at 15 yards, IC Choke

5 ROUND OF TAC 8
fired at 15 yards, IC Choke

FRANGIBLE BUCKSHOT

Reliable lead-free and heavy-metal-free primer • Lead-free pellets produce instant, complete breakup when impacting steel targets and steel backstops • Optimized powder blends for efficient utilization with minimum unburned residue • Pattern performance nearly equivalent to conventional loads • Shotcup and buffering protect shot for enhanced patterns • Pellet fragment splash-back virtually eliminated

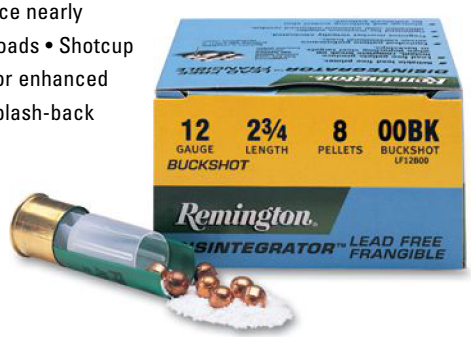

REDUCED-RECOIL 00-BUCKSHOT

Made specifically for duty and training applications that encourage shotgun usage • Our 8- or 9-pellet Reduced-Recoil 00-Buckshot produces lower felt recoil by 40% for better follow-up shots • Enhanced with Power Piston® shot cup, polymer buffering, and hardened 3% antimony lead pellets contributing to outstanding patterns

LAW ENFORCEMENT BUCKSHOT

Available in standard and magnum loadings and 5 buckshot sizes: 000, 00, 0, 1 and 4 • Provides reliability, consistency and stopping power • Our 9-pellet 00-Express LE Buckshot created a new standard of pattern performance with the addition of our one-piece compression section Power Piston® wad column, polymer buffering and hard lead pellets • This combination produces patterns 25% tighter than previous buckshot offerings

TB12 BREACHING ROUND

TB12

TB12 is a mission-specific shotgun ballistic breaching round used to defeat a variety of urban structures to include exterior and interior doors. TB12 provides a dramatic reduction in collateral damage to non-combatants as well as operators through the use of a frangible material that delivers maximum energy to the breach point yet turns to a near harmless powder upon impact. TB12 is a cost-effective training and operational breaching round allowing operators to "train as they fight." The frangible property of TB12 delivers near-threat lethality in addition to being a superb breaching round, ensuring that the breacher remains operational regardless of the weapon system being used.

Remington® LAW ENFORCEMENT PRODUCTS
www.remingtonle.com

REMINGTON® CENTERFIRE RIFLE CARTRIDGE

(Packed 20 rounds per box, 10 boxes per case, 200 rounds per case)

"ZERO" INDICATES YARDAGE AT WHICH RIFLE WAS SIGHTED IN.
Bullet does not rise more than 1" above line of sight from muzzle to sighting-in range.

Caliber	Index IDI No.	Ramac No.	Primer No.	Wt. (g.)	Bullet Style	VELOCITY (ft./sec.)			ENERGY (ft./lbs.)			SHORT-RANGE TRAJECTORY						Ballistic Coefficient
						Muzzle	100 yds.	200 yds.	Muzzle	100 yds.	200 yds.	50 yds.	100 yds.	150 yds.	200 yds.	250 yds.	300 yds.	
223 Remington	PRA223RB	29184	7 ½	50	AccuTip, Boat Tail	3410	2989	2605	1291	992	753	-0.1	0.4	ZERO	-1.5	-4.4	-8.7	0.242
	PRA223RC	29192	7 ½	55	AccuTip, Boat Tail	3240	2854	2500	1282	995	763	0.2	0.6	ZERO	-1.8	-5.1	-9.9	0.255
	R223R1	28399	7 ½	55	PSP	3240	2747	2304	1282	921	648	0.0	0.6	ZERO	-2.0	-5.6	-11.2	0.197
	R223R2	29047	7 ½	55	HP, Power-Lokt	3240	2773	2352	1282	939	675	0.0	0.6	ZERO	-1.9	-5.4	-10.7	0.209
	R223R3	28401	7 ½	55	Metal Case	3240	2759	2326	1282	929	660	0.0	0.6	ZERO	-1.9	-5.5	-11.0	0.202
	R223R6	22106	7 ½	62	HP (Match)	3025	2572	2162	1260	911	643	0.2	0.7	ZERO	-2.3	-6.5	-12.9	0.205
	RM223R1	27680	7 ½	69	BTHP (Match)	3000	2720	2457	1379	1133	925	0.1	0.6	ZERO	-1.9	-5.3	-10.3	0.336
	RM223R3	27686	7 ½	77	BTHP (Match)	2800	2551	2314	1340	1112	916	0.3	0.8	ZERO	-2.3	-6.2	-11.8	0.375
6.8mm Remington SPC	R68R1	29146	9 ½	115	OT (Match)	2625	2373	2135	1759	1437	1163	0.4	1.0	ZERO	-2.7	-7.3	-14.1	0.344
	RM68R1	27676	9 ½	115	BTHP (Match)	2625	2365	2119	1759	1428	1147	0.5	1.0	ZERO	-2.7	-7.4	-14.3	0.333
	PRC68R4	29128	9 ½	115	Core-Lokt Ultra Bonded	2625	2332	2058	1759	1389	1082	0.5	1.0	ZERO	-2.8	-7.8	-15.0	0.295
30-30 Win.	R3030A	21397	9 ½	55	SP, Accelerator	3400	2693	2085	1412	886	531	0.0	0.6	ZERO	-2.2	-6.2	-13.2	0.139
	R30301	27818	9 ½	150	SP, Core-Lokt	2390	1973	1605	1902	1296	858	0.2	ZERO	-2.4	-7.6	-16.1	-28.8	0.193
	R30302	27820	9 ½	170	SP, Core-Lokt	2200	1895	1619	1827	1355	989	0.3	ZERO	-2.7	-8.3	-17.1	-29.9	0.254
	R30303	21395	9 ½	170	HP, Core-Lokt	2200	1895	1619	1827	1355	989	0.3	ZERO	-2.7	-8.3	-17.1	-29.9	0.254
30 Carbine	R30CAR	28322	6 ½	110	SP	1990	1567	1236	967	600	373	0.6	ZERO	-4.2	-12.9	-27.2	-48.6	0.166
308 Win.	PRSC308WA	29334	9 ½	150	Swift Scirocco Bonded	2820	2611	2410	2648	2269	1935	0.0	ZERO	-1.1	-3.6	-7.6	-13.2	0.435
	R308W1	27842	9 ½	150	PSP, Core-Lokt	2820	2533	2263	2648	2137	1705	0.0	ZERO	-1.2	-3.9	-8.4	-14.7	0.314
	PRSC308WB	29332	9 ½	165	Swift Scirocco Bonded	2700	2513	2333	2670	2313	1994	0.0	ZERO	-1.3	-4.0	-8.4	-14.4	0.475
	RM308W7	21485	9 ½	168	BTHP (Match)	2680	2493	2314	2678	2318	1998	-0.1	ZERO	-1.3	-4.1	-8.5	-14.7	0.475
	RM308W8	21486	9 ½	175	BTHP (Match)	2610	2421	2241	2647	2278	1951	0.4	0.9	ZERO	-2.5	-6.8	-13.0	0.496
	PRC308WC	29116	9 ½	180	Core-Lokt Ultra Bonded	2620	2404	2198	2743	2309	1930	0.0	ZERO	-1.4	-4.5	-9.4	-16.3	0.402
	R308W3	21479	9 ½	180	PSP, Core-Lokt	2620	2393	2178	2743	2288	1896	0.0	ZERO	-1.5	-4.6	-9.5	-16.5	0.383
30-06 Sprg.	PRSC3006C	29318	9 ½	150	Swift Scirocco Bonded	2910	2696	2492	2820	2421	2069	0.1	0.7	ZERO	-2.0	-5.3	-10.2	0.435
	R30062	27826	9 ½	150	PSP, Core-Lokt	2910	2617	2342	2820	2281	1827	0.2	0.7	ZERO	-2.2	-5.9	-11.4	0.314
	R30063	21405	9 ½	150	BRPT	2910	2656	2416	2820	2349	1944	0.2	0.7	ZERO	-2.0	-5.6	-10.8	0.365
	R3006B	21415	9 ½	165	PSP, Core-Lokt	2800	2534	2283	2872	2352	1909	0.3	0.8	ZERO	-2.3	-6.3	-12.1	0.339
	PRC3006B	29008	9 ½	168	Core-Lokt Ultra Bonded	2800	2546	2306	2924	2418	1984	0.3	0.8	ZERO	-2.3	-6.2	-11.9	0.356
	PRC3006C	29004	9 ½	180	Core-Lokt Ultra Bonded	2700	2480	2270	2913	2457	2059	0.0	ZERO	-1.3	-4.2	-8.7	-15.1	0.402
	PRSC3006B	29328	9 ½	180	Swift Scirocco Bonded	2700	2522	2351	2913	2542	2208	0.0	ZERO	-1.3	-4.0	-8.3	-14.2	0.500
	R30064	21407	9 ½	180	SP, Core-Lokt	2700	2348	2023	2913	2203	1635	0.0	ZERO	-1.5	-4.9	-10.3	-18.3	0.248
	R30065	27828	9 ½	180	PSP, Core-Lokt	2700	2469	2250	2913	2436	2023	0.0	ZERO	-1.3	-4.2	-8.8	-15.4	0.383
	R30067	27830	9 ½	220	SP, Core-Lokt	2410	2130	1870	2837	2216	1708	0.1	ZERO	-2.0	-6.2	-12.9	-22.4	0.294
300 Remington Ultra Mag.	PR300UM5	27950	9 ½	150	Swift Scirocco Bonded	3450	3208	2980	3964	3427	2956	0.0	0.3	ZERO	-1.2	-3.4	-6.7	0.435
	PR300UM3	27936	9 ½	180	Swift Scirocco Bonded	3250	3048	2856	4221	3714	3260	0.0	0.4	ZERO	-1.4	-3.9	-7.5	0.500
	PR300UM4	27948	9 ½	180	SP, Core-Lokt Ultra	3250	2988	2742	4221	3568	3003	0.0	0.4	ZERO	-1.5	-4.2	-8.1	0.382
300 Remington SA Ultra Mag.	PR300SM1	27952	9 ½ M	150	PSP, Core-Lokt Ultra	3200	2901	2622	3410	2803	2290	0.1	0.5	ZERO	-1.6	-4.6	-8.9	0.330
	PR300SM2	27954	9 ½ M	165	SP, Core-Lokt Ultra	3075	2792	2527	3464	2856	2339	0.1	0.6	ZERO	-1.8	-5.0	-9.7	0.339
300 Win. Mag.	R300W1	29495	9 ½ M	150	PSP, Core-Lokt	3290	2950	2634	3605	2897	2311	0.0	0.5	ZERO	-1.6	-4.4	-8.7	0.294
	PRC300WA	29034	9 ½ M	150	Core-Lokt Ultra Bonded	3290	2967	2666	3605	2931	2366	-0.1	0.5	ZERO	-1.6	-4.3	-8.5	0.310
	PRSC300WB	29330	9 ½ M	180	Swift Scirocco Bonded	2960	2274	2595	3501	3075	2692	0.1	0.6	ZERO	-1.8	-4.9	-9.4	0.507
	PRC300WC	29032	9 ½ M	180	Core-Lokt Ultra Bonded	2960	2774	2505	3501	2971	2508	0.1	0.6	ZERO	-1.9	-5.2	-10.0	0.402
	PRA300WC	29212	9 ½ M	180	AccuTip, Boat Tail	2960	2764	2577	3501	3053	2653	0.1	0.6	ZERO	-1.8	-4.9	-9.5	0.481
	R300W2	29497	9 ½ M	180	PSP, Core-Lokt	2960	2715	2482	3501	2945	2463	0.1	0.6	ZERO	-1.9	-5.3	-10.2	0.383
	RM300W7	27684	9 ½ M	190	BTHP (Match)	2900	2725	2557	3547	3133	2758	0.1	0.6	ZERO	-1.9	-5.1	-9.8	0.533
7mm Rem. Mag.	PRA7MMRB	29206	9 ½ M	150	AccuTip, Boat Tail	3110	2926	2749	3221	2850	2516	0.0	0.5	ZERO	-1.6	-4.3	-8.2	0.530
	R7MM2	29487	9 ½ M	150	PSP, Core-Lokt	3110	2830	2568	3221	2667	2196	0.0	0.6	ZERO	-1.7	-4.8	-9.3	0.346
	RS7MMA	27893	9 ½ M	160	PSP, A-Frame	2900	2659	2430	2987	2511	2097	0.2	0.7	ZERO	-2.0	-5.5	-10.7	0.382
	R7MM3	27814	9 ½ M	175	PSP, Core-Lokt	2860	2645	2440	3178	2718	2313	0.2	0.7	ZERO	-2.1	-5.6	-10.7	0.427
	PRSC7MMB	29316	9 ½ M	150	Swift Scirocco	3110	2927	2751	3221	2852	2520	0.0	0.5	ZERO	-1.6	-4.3	-8.2	0.533
	PRC7MMRC	28980	9 ½ M	160	Core-Lokt Ultra Bonded	2950	2724	2510	3091	2636	2237	0.1	0.6	ZERO	-1.9	-5.2	-10.0	0.415
338 Lapua Magnum	RM338LMR1	27944	9 ½ M	250	Scenar	2960	2820	2683	4863	4412	3996	0.3	0.6	ZERO	-1.7	-4.7	-8.9	0.675

Bullet Style Descriptions: OT=Open Tip / BTHP=Boat Tail Hollow Point / BRPT=Bronze Point / HP=Hollow Point / MC=Metal Case / PSP-Pointed Soft Point / SP=Soft Point

UMC® CENTERFIRE RIFLE CARTRIDGE

(Packed 20 rounds per box, 10 boxes per case, 200 rounds per case)

"ZERO" INDICATES YARDAGE AT WHICH RIFLE WAS SIGHTED IN.
Bullet does not rise more than 1" above line of sight from muzzle to sighting-in range.

Caliber	Index IDI No.	Ramac No.	Primer No.	Wt. (g.)	Bullet Style	VELOCITY (ft./sec.)			ENERGY (ft./lbs.)			SHORT-RANGE TRAJECTORY						Ballistic Coefficient
						Muzzle	100 yds.	200 yds.	Muzzle	100 yds.	200 yds.	50 yds.	100 yds.	150 yds.	200 yds.	250 yds.	300 yds.	
223 Remington	L223R7	23748	7 ½	45	Jacketed Hollow Point	3550	2953	2430	1259	871	590	-0.1	0.4	ZERO	-1.7	-4.8	-9.7	0.173
	L223R8	23812	7 ½	50	Jacketed Hollow Point	3425	2899	2430	1302	933	655	-0.1	0.5	ZERO	-1.7	-4.9	-9.9	0.192
	L223R3	23711	7 ½	55	Metal Case	3240	2759	2326	1282	929	660	0.0	0.6	ZERO	-1.9	-5.5	-11.0	0.202
	L223R3L[1]	23894	7 ½	55	Metal Case	3240	2993	2759	1282	1094	930	-0.1	0.6	ZERO	-1.9	-5.5	-11.0	0.202
	L223R9	23815	7 ½	62	Closed Tip Flat Base	3100	2734	2396	1323	1029	790	0.1	0.6	ZERO	-1.9	-5.4	-10.6	0.260
30 Carbine	L30CR1[2]	23712	6 ½	110	Metal Case	1990	1769	1567	967	764	600	0.6	ZERO	-4.2	-12.9	-27.2	-48.6	0.166
30-06 Sprg.	L30062	23699	9 ½	150	Metal Case	2910	2617	2342	2820	2281	1827	-0.2	ZERO	-1.1	-3.6	-7.7	-13.6	0.314
308 Win.	L308W4	23715	9 ½	150	Metal Case	2820	2533	2263	2648	2137	1705	-0.1	ZERO	-1.2	-3.9	-8.4	-14.7	0.314
6.8mm Remington SPC	L68R2	24035	9 ½	115	Metal Case	2625	2329	2053	1759	1385	1076	0.5	1.0	ZERO	-2.9	-7.8	-15.1	0.292
7.62 x 39mm	L762391	23709	7 ½	123	Metal Case	2365	2060	1780	1527	1159	865	0.1	ZERO	-2.2	-6.8	-14.1	-24.5	0.266
303 British	L303B1	23701	9 ½	174	Metal Case	2475	2209	1960	2366	1885	1484	0.1	ZERO	-1.9	-5.9	-12.2	-21.4	0.315

[1] Linked in 100 Round Belt, 5 Belts Per Case, 500 Rounds Per Case. [2] Packed 50 Rounds Per Box, 10 Boxes Per Case, 500 Rounds Per Case.

REMINGTON® PISTOL AND REVOLVER DUTY AMMUNITION (Packed 50 rounds per box, 10 boxes per case, 500 rounds per case)

Caliber	Index IDI No.	Ramac No.	Primer No.	Wt. (g.)	Bullet Style	VELOCITY (ft./sec.)			ENERGY (ft./lbs.)			MID-RANGE TRAJECTORY (inch)	
						Muzzle	25 yds.	50 yds.	Muzzle	25 yds.	50 yds.	25 yds.	50 yds.
25 (6.35mm) Auto	R25AP	22200	1 ½	50	Metal Case	760	707	659	64	56	48	0.5	2.0
32 S&W	R32SW	22204	1 ½	88	Lead	680	645	610	90	81	73	0.6	2.5
32 S&W Long	R32SWL	22208	1 ½	98	Lead	705	670	635	115	98	88	0.6	2.3
32 (7.65mm) Auto	R32AP	22212	1 ½	71	Metal Case	905	855	810	129	115	97	0.4	1.4
357 Mag.**	R357M7	22228	5 ½	110	Semi-Jacketed Hollow Point	1295	1094	975	410	292	232	0.2	0.8
	R357M1	22216	5 ½	125	Semi-Jacketed Hollow Point	1450	1240	1090	583	427	330	0.1	0.6
	R357M2	22218	5 ½	158	Semi-Jacketed Hollow Point	1235	1104	1015	535	428	361	0.2	0.8
	R357M3	22220	5 ½	158	Soft Point	1235	1104	1015	535	428	361	0.2	0.8
	R357M5	22224	5 ½	158	Semi-Wadcutter	1235	1104	1015	535	428	361	0.2	0.8
	RH357MA	29466	5 ½	165	Jacketed Hollow Point Core-Lokt	1290	1237	1189	610	561	518	0.2	0.7
	R357M10	22234	5 ½	180	Semi-Jacketed Hollow Point	1145	1053	985	524	443	388	0.2	0.9
9mm Luger	R9MM1	28285	1 ½	115	Jacketed Hollow Point	1155	1047	971	341	280	241	0.9	3.9
	R9MM3	28290	1 ½	115	Metal Case	1135	1041	973	329	277	242	0.9	4.0
	R9MM6	28289	1 ½	115	Jacketed Hollow Point +P ‡	1250	1113	1019	399	316	265	0.2	0.8
	RB9MM6	28324	1 ½	115	Jacketed Hollow Point, Bonded +P ‡	1250	1175	1113	399	353	316	0.2	0.8
	R9MM2	22240	1 ½	124	Metal Case	1110	1030	971	339	292	259	0.2	0.9
	R9MM8	28299	1 ½	147	Jacketed Hollow Point (Subsonic)	990	941	900	320	289	264	0.3	1.1
380 Auto	R380A1	22246	1 ½	88	Jacketed Hollow Point	990	920	868	191	165	146	0.3	1.2
	R380AP	22252	1 ½	95	Metal Case	955	865	785	190	160	130	0.3	1.4
38 S&W	R38SW	22276	1 ½	146	Lead Round Nose	685	650	620	150	135	125	0.6	2.5
38 Special**	R38S10	22298	1 ½	110	Semi-Jacketed Hollow Point +P ‡	995	926	871	242	210	185	0.3	1.2
	R38S16	22310	1 ½	110	Semi-Jacketed Hollow Point	950	890	840	220	194	172	0.3	1.3
	R38S2	22282	1 ½	125	Semi-Jacketed Hollow Point +P ‡	945	898	858	248	224	204	0.3	1.3
	R38S3	22284	1 ½	148	Targetmaster® Lead WC Match	710	634	566	166	132	105	0.6	2.4
	R38S5	22288	1 ½	158	Lead Round Nose	755	723	692	200	183	168	0.5	2.1
	R38S14	22304	1 ½	158	Semi-Wadcutter +P ‡	890	855	823	278	257	238	0.3	1.4
	R38S6	22290	1 ½	158	Semi-Wadcutter	755	723	692	200	183	168	0.5	2.1
	R38S12	22300	1 ½	158	Lead Hollow Point +P ‡	890	855	823	278	257	238	0.3	1.4
38 Short Colt**	R38SC	28368	1 ½	125	Lead Round Nose	730	685	645	150	130	115	0.5	2.2
357 SIG	R357S1	22258	5 ½	125	Jacketed Hollow Point	1350	1245	1157	506	430	372	0.2	0.7
40 S&W	R40SW1	28347	5 ½	155	Jacketed Hollow Point	1205	1095	1017	499	413	356	0.2	0.8
	R40SW2	28353	5 ½	180	Jacketed Hollow Point	1015	960	914	412	368	334	0.3	1.1
	R40SW5	28799	5 ½	155	Metal Case	1205	1134	1076	500	443	399	0.2	0.8
41 Remington Mag.**	R41MG1	22316	2 ½	210	Soft Point	1300	1162	1062	788	630	526	0.2	0.7
45 Colt**	R45C1	28556	2 ½	225	Semi-Wadcutter	960	890	832	460	395	346	0.3	1.3
	R45C	28490	2 ½	250	Lead Round Nose	860	820	780	410	375	340	0.4	1.6
45 Auto	R45AP2	21456	2 ½	185	Jacketed Hollow Point	1000	939	889	411	362	324	0.3	1.1
	R45AP7	21469	2 ½	230	Jacketed Hollow Point (Subsonic)	835	800	767	356	326	300	0.4	1.6
	R45AP4	21448	2 ½	230	Metal Case	835	800	767	356	326	300	0.4	1.6

**Note: These ballistics reflect vented barrel. ‡Ammunition with "+P" or "+P+" on the case headstamp is loaded to higher pressure. Use only in firearms designated for this cartridge and so recommended by the gun manufacturer.

GOLDEN SABER® BONDED HPJ (HIGH-PERFORMANCE JACKET) (Packed 50 rounds per box, 10 boxes per case, 500 rounds per case)

Caliber	Index IDI No.	Ramac No.	Primer No.	Wt. (g.)	Bullet Style	VELOCITY (ft./sec.)			ENERGY (ft./lbs.)			MID-RANGE TRAJECTORY (inch)	
						Muzzle	25 yds.	50 yds.	Muzzle	25 yds.	50 yds.	25 yds.	50 yds.
357 SIG	GSB357SB	29408	5 ½	125	Brass-Jacketed Hollow Point, Bonded	1350	1245	1157	506	430	372	0.2	0.7
9mm Luger +P ‡	GS9MMD	29424	1 ½	124	Brass-Jacketed Hollow Point, Bonded	1180	1131	1089	383	352	326	0.2	0.8
	GSB9MMC	29352	1 ½	147	Brass-Jacketed Hollow Point, Bonded	990	965	941	320	304	289	0.3	1.1
40 S&W	GSB40SWA	29366	5 ½	165	Brass-Jacketed Hollow Point, Bonded	1150	1089	1040	484	435	396	0.2	0.9
	GSB40SWB	29368	5 ½	180	Brass-Jacketed Hollow Point, Bonded	1015	986	960	412	388	368	0.3	1.1
45 Auto	GSB45APA	29414	2 ½	185	Brass-Jacketed Hollow Point, Bonded	1015	981	951	423	395	371	0.3	1.1
	GSB45APB	29378	2 ½	230	Brass-Jacketed Hollow Point, Bonded	875	853	833	391	372	354	0.4	1.5

‡Ammunition with "+P" or "+P+" on the case headstamp is loaded to higher pressure. Use only in firearms designated for this cartridge and so recommended by the gun manufacturer.

GOLDEN SABER® HPJ (HIGH-PERFORMANCE JACKET) (Packed 25 rounds per box, 20 boxes per case, 500 rounds per case)

Caliber	Index IDI No.	Ramac No.	Primer No.	Wt. (g.)	Bullet Style	VELOCITY (ft./sec.)			ENERGY (ft./lbs.)			MID-RANGE TRAJECTORY (inch)	
						Muzzle	25 yds.	50 yds.	Muzzle	25 yds.	50 yds.	25 yds.	50 yds.
357 Mag.**	GS357MA	29400	5 ½	125	Brass-Jacketed Hollow Point	1220	1152	1095	413	368	333	0.2	0.8
9mm Luger	GS9MMB	29420	1 ½	124	Brass-Jacketed Hollow Point	1125	1074	1031	349	317	293	0.2	0.9
	GSB9MMD	29350	1 ½	124	Brass-Jacketed Hollow Point +P ‡	1180	1131	1089	384	352	327	0.2	0.8
	GS9MMC	29422	1 ½	147	Brass-Jacketed Hollow Point	990	965	941	320	304	289	0.3	1.1
380 Auto	GS380B	29410	1 ½	102	Brass-Jacketed Hollow Point	940	920	901	200	192	184	0.3	1.4
38 Special**	GS38SB	29432	1 ½	125	Brass-Jacketed Hollow Point +P ‡	975	950	929	264	250	238	0.3	1.3
40 S&W	GS40SWA	29440	5 ½	165	Brass-Jacketed Hollow Point	1150	1089	1040	485	435	396	0.2	0.9
	GS40SWB	29442	5 ½	180	Brass-Jacketed Hollow Point	1015	986	960	412	388	368	0.3	1.1
45 Auto	GS45AP	29444	2 ½	185	Brass-Jacketed Hollow Point	1015	981	951	423	395	371	0.3	1.1
	GS45APB	29448	2 ½	230	Brass-Jacketed Hollow Point	875	853	833	391	372	355	0.4	1.5
	GS45APC	29450	2 ½	185	Brass-Jacketed Hollow Point +P ‡	1140	1086	1041	534	484	445	0.2	0.9

**Note: These ballistics reflect vented barrel. ‡Ammunition with "+P" or "+P+" on the case headstamp is loaded to higher pressure. Use only in firearms designated for this cartridge and so recommended by the gun manufacturer.

REMINGTON® DUTY SLUG SHELLS

Loads	Index IDI No.	Ramac No.	Gauge	Shell Length (in.)	Velocity (ft./sec.)	Number of Pellets	Slug weight	Rounds Per Box	Boxes Per Case	Rounds Per Case
Slugger® Rifled Slug	SP12RS	20300	12	2 ¾	1560	—	1 oz. Rifled Slug	5	50	250
	SP12RSB(Blue Hull)	20279	12	2 ¾	1560	—	1 oz. Rifled Slug	5	50	250
	S12SRS	20302	12	2 ¾	1680	—	1 oz. Rifled Slug	5	50	250
	S12MRS	20270	12	3	1760	—	1 oz. Rifled Slug	5	50	250
Reduced Recoil Rifled Slug	RR12RS*	20298	12	2 ¾	1200	—	1 oz. Rifled Slug	25	10	250
	RR12RSB(Blue Hull)*	20285	12	2 ¾	1200	—	1 oz. Rifled Slug	5	50	250

*May not function all types of autoloading shotguns.

REMINGTON® DUTY BUCKSHOT SHELLS

Loads	Index IDI No.	Ramac No.	Gauge	Shell Length (in.)	Dram Equiv.	Velocity (ft./sec.)	Number of Pellets	Slug weight	Rounds Per Box	Boxes Per Case	Rounds Per Case
Reduced Recoil Buckshot	RR12BK00	20643	12	2 ¾	3	1200	9	00 Buck	25	10	250
	RR128B00	20645	12	3	2 ¾	1200	8	00 Buck	25	10	250
Buckshot	12B000	20406	12	2 ¾	3 ¾	1325	8	000 Buck	5	50	250
	12B00	20620	12	2 ¾	3 ¾	1325	9	00 Buck	5	50	250
	12B0	20622	12	2 ¾	3 ¾	1275	12	0 Buck	5	50	250
	12B1	20624	12	2 ¾	3 ¾	1250	16	1 Buck	5	50	250
	12B4	20626	12	2 ¾	3 ¾	1325	27	4 Buck	5	50	250
Law Enforcement Buckshot	SPL1200	20812	12	2 ¾	3 ¾	1325	9	00 Buck	25	10	250
Magnum Buckshot	12SB00	20632	12	2 ¾	4	1290	12	00 Buck	5	50	250
	12HB000	20408	12	3	4	1225	10	000 Buck	5	50	250
	12HB00	20636	12	3	4	1225	15	00 Buck	5	50	250
	12HB4	20640	12	3	4	1225	41	4 Buck	5	50	250
TAC® 8 Buckshot	12BT800	20662	12	2 ¾	3 ¾	1325	8	00 Buck	5	50	250

DISINTEGRATOR® CTF LEAD-FREE JACKETLESS, FRANGIBLE AMMUNITION (PISTOL & REVOLVER)

(Packed 50 rounds per box, 10 boxes per case, 500 rounds per case)

Caliber	Index IDI No.	Ramac No.	Primer No.	Wt. (g.)	Bullet Style	VELOCITY (ft./sec.)			ENERGY (ft./lbs.)			MID-RANGE TRAJECTORY (inch)		Barrel Length (inch)
						Muzzle	25 yds.	50 yds.	Muzzle	25 yds.	50 yds.	25 yds.	50 yds.	
9mm (+P)	CTF9MMA	29459	1 ½ HMF	90	Copper Tin Frangible	1400	1290	1196	392	332	286	0.2	0.7	4
9mm (+P)	CTF9MMB	29460	1 ½ HMF	100	Copper Tin Frangible	1300	1213	1141	375	327	289	0.2	0.7	4
357 SIG	CTF357SA	29462	5 ½ HMF	100	Copper Tin Frangible	1485	1361	1252	490	411	348	0.1	0.6	4
40 S&W	CTF40SWA	29463	5 ½ HMF	125	Copper Tin Frangible	1300	1194	1110	469	396	342	0.2	0.8	4
45 Auto	CTF45APA	29464	2 ½ HMF	155	Copper Tin Frangible	1150	1078	1022	455	400	360	0.2	0.9	5

‡Ammunition with (+P) on the case headstamp is loaded to higher pressure. Use only in firearms designated for this cartridge and so recommended by the gun manufacturer. 500 rounds per case.

DISINTEGRATOR® LEAD-FREE PLATED JACKETED, FRANGIBLE AMMUNITION (PISTOL & REVOLVER)

(Packed 50 rounds per box, 10 boxes per case, 500 rounds per case)

Caliber	Index IDI No.	Ramac No.	Primer No.	Wt. (g.)	Bullet Style	VELOCITY (ft./sec.)			ENERGY (ft./lbs.)			MID-RANGE TRAJECTORY (inch)		Barrel Length (inch)
						Muzzle	25 yds.	50 yds.	Muzzle	25 yds.	50 yds.	25 yds.	50 yds.	
357 Mag.	LF357MA	23884	5 ½ LF	101	LF, Plated, Powdered Metal Core	1250	1175	1112	350	310	277	0.2	0.8	4V
9mm Luger (+P)	LF9MMB	23858	1 ½ LF	101	LF, Plated, Powdered Metal Core ‡	1250	1175	1112	350	310	277	0.2	0.8	4
38 Special (+P)	LF38SA	23880	1 ½ LF	101	LF, Plated, Powdered Metal Core ‡	950	922	896	202	191	180	0.4	1.2	4V
357 SIG	LF357SA	23878	5 ½ LF	104	LF, Plated, Powdered Metal Core	1345	1257	1181	418	365	322	0.2	0.7	4
40 S&W	LF40SWA	23864	5 ½ LF	141	LF, Plated, Powdered Metal Core	1135	1093	1056	403	374	349	0.2	0.9	4
45 Auto	LF45APA	23866	2 ½ LF	175	LF, Plated, Powdered Metal Core	1020	967	923	404	363	331	0.3	1.2	5

‡Ammunition with (+P) on the case headstamp is loaded to higher pressure. Use only in firearms designated for this cartridge and so recommended by the gun manufacturer. 500 rounds per case.

DISINTEGRATOR® LEAD-FREE JACKETED, FRANGIBLE AMMUNITION (PISTOL & REVOLVER)

(Packed 50 rounds per box, 10 boxes per case, 500 rounds per case)

Caliber	Index IDI No.	Ramac No.	Primer No.	Wt. (g.)	Bullet Style	VELOCITY (ft./sec.)			ENERGY (ft./lbs.)			MID-RANGE TRAJECTORY (inch)		Barrel Length (inch)
						Muzzle	25 yds.	50 yds.	Muzzle	25 yds.	50 yds.	25 yds.	50 yds.	
9mm Luger (+P)	FE9MMI	28358	1 ½ LF	101	LF, Jacketed, Powdered Metal Core ‡	1250	1175	1112	350	310	277	0.2	0.8	4
357 SIG	FE357S1	23886	5 ½ LF	104	LF, Jacketed, Powdered Metal Core	1345	1257	1181	418	365	322	0.2	0.7	4
40 S&W	FE40SW1	28360	5 ½ LF	141	LF, Jacketed, Powdered Metal Core	1135	1093	1056	403	374	349	0.2	0.9	4

‡Ammunition with (+P) on the case headstamp is loaded to higher pressure. Use only in firearms designated for this cartridge and so recommended by the gun manufacturer. 500 rounds per case.

DISINTEGRATOR® LEAD-FREE JACKETED, FRANGIBLE AMMUNITION (RIFLE)

(Packed 20 rounds per box, 10 boxes per case, 200 rounds per case)

Caliber	Index IDI No.	Ramac No.	Primer No.	Wt. (g.)	Bullet Style	VELOCITY (ft./sec.)			ENERGY (ft./lbs.)			MID-RANGE TRAJECTORY (inch)	
						Muzzle	25 yds.	50 yds.	Muzzle	25 yds.	50 yds.	25 yds.	50 yds.
223 Remington	LF223RA[1]	23876	7½ HF	45	LF, Jacketed Powdered Metal Core	2700	2462	2235	728	605	499	0.2	0.7
	LF223R5B[2]	23896	7 ½ HF	55	LF, Jacketed Powdered Metal Core	3240	3031	2831	1282	1122	979	0.0	0.5

[1] Ballistics are from a 14 1/2" BBL (M4). [2] Packed 50 Rounds Per Box, 10 Boxes Per Case, 500 Rounds Per Case.

DISINTEGRATOR® SABOT SLUGS (LEAD-FREE, FRANGIBLE)

(Packed 25 rounds per box, 10 boxes per case, 250 rounds per case)

Gauge	Index IDI No.	Ramac No.	Primer No.	Shell Length	Slug Wt. (oz.)	VELOCITY (ft./sec.)				ENERGY (ft./lbs.)				MID-RANGE TRAJECTORY (inch)		
						Muzzle	25 yds.	50 yds.	100 yds.	Muzzle	25 yds.	50 yds.	100 yds.	25 yds.	50 yds.	100 yds.
12	LF12FSS25	20810	209 HMF	2 ¾"	⅝	1815	1470	1203	936	1997	1310	877	531	0.1	0.5	3.0
12 (Reduced Recoil)	RRLF12FSS25	20635	209 HMF	2 ¾"	⅝	1700	1377	1140	911	1752	1149	788	503	0.1	0.6	3.3

HMF = Heavy-Metal-Free

DISINTEGRATOR® BUCKSHOT (LEAD-FREE, PLATED, FRANGIBLE)

(Packed 25 rounds per box, 10 boxes per case, 250 rounds per case)

Gauge	Index IDI No.	Ramac No.	Primer No.	Shell Length (in.)	Velocity (ft./sec.)	Buckshot Size	Pellet Count
12	LF12B00	20804	209 Heavy-Metal-Free	2 ¾	1600	00	8
12	LF129B00	20805	209 Heavy-Metal-Free	2 ¾	1550	00	9
12	LF12B4	20809	209 Heavy-Metal-Free	2 ¾	1450	4	27
12 (Reduced Recoil)	RRLF12B00	20642	209 Heavy-Metal-Free	2 ¾	1300	00	8
12 (Reduced Recoil)	RRLF129B00	20641	209 Heavy-Metal-Free	2 ¾	1250	00	9
12 (Reduced Recoil)	RRLF12B4	20647	209 Heavy-Metal-Free	2 ¾	1200	4	27

UMC® LEADLESS CENTERFIRE PISTOL & REVOLVER AMMUNITION (Packed 25 rounds per box, 20 boxes per case, 500 rounds per case)

Caliber	Index IDI No.	Ramac No.	Primer No.	Wt. (g.)	Bullet Style	VELOCITY (ft./sec.)			ENERGY (ft./lbs.)			MID-RANGE TRAJECTORY (in.)	
						Muzzle	25 yds.	50 yds.	Muzzle	25 yds.	50 yds.	25 yds.	50 yds.
9mm Luger	LL9MM11	23785	1 ½	115	Flat Nosed Metal Case w/Enclosed Base	1135	1084	1041	329	300	277	0.2	0.9
	LL9MM2	23811	1 ½	124	Flat Nosed Metal Case w/Enclosed Base	1100	1063	1030	333	311	292	0.2	0.9
	LL9MM9	23749	1 ½	147	Flat Nosed Metal Case w/Enclosed Base	990	964	941	320	304	289	0.3	1.1
357 Mag.	LL357MI	23808	5 ½	125	Flat Nosed Metal Case w/Enclosed Base	1450	1338	1240	583	497	427	0.1	0.6
380 Auto	LL380AP2	23805	1 ½	95	Flat Nosed Metal Case w/Enclosed Base	955	904	860	192	172	156	0.3	1.3
38 Special	LL38S17	23789	1 ½	125	Flat Nosed Metal Case w/Enclosed Base	850	836	822	201	194	188	0.3	1.4
38 Special +P	LL38S2	23801	1 ½	125	Flat Nosed Metal Case w/Enclosed Base +P ‡	975	954	935	264	253	243	0.3	1.2
40 S&W	LL40SW5	23791	5 ½	180	Flat Nosed Metal Case w/Enclosed Base	985	959	935	388	367	350	0.3	1.2
45 Auto	LL45AP8	23793	2 ½	230	Flat Nosed Metal Case w/Enclosed Base	835	817	800	356	341	326	0.4	1.6

**Note: These ballistics reflect vented barrel. ‡Ammunition with "+P" on the case headstamp is loaded to higher pressure. Use only in firearms designated for this cartridge and so recommended by the gun manufacturer.

UMC® CENTERFIRE PISTOL & REVOLVER AMMUNITION (Packed 50 rounds per box, 10 boxes per case, 500 rounds per case)

Caliber	Index IDI No.	Ramac No.	Primer No.	Wt. (g.)	Bullet Style	VELOCITY (ft./sec.)			ENERGY (ft./lbs.)			MID-RANGE TRAJECTORY (in.)	
						Muzzle	25 yds.	50 yds.	Muzzle	25 yds.	50 yds.	25 yds.	50 yds.
25 Auto Pistol (6.35mm)	L25AP	23716	1 ½	50	Metal Case	760	733	707	64	60	56	0.5	2.0
32 Auto (7.65mm)	L32AP	23704	1 ½	71	Metal Case	905	879	854	129	122	115	0.4	1.7
357 Mag.**	L357M12	23738	5 ½	125	Jacketed Soft Point	1450	1338	1240	583	497	427	0.1	0.6
9mm Luger	L9MM1	23752	1 ½	115	Jacketed Hollow Point	1155	1095	1046	341	306	280	0.2	0.9
	L9MM3	23728	1 ½	115	Metal Case	1135	1084	1041	329	300	277	0.2	0.9
	L9MM2	23718	1 ½	124	Metal Case	1100	1067	1030	339	314	292	0.2	1.0
	L9MM9	23732	1 ½	147	Metal Case	990	965	941	320	304	289	0.3	1.1
380 Auto	L380AP	23720	1 ½	95	Metal Case	955	904	860	192	172	156	0.3	1.3
38 Super Auto	L38SUP	23722	1 ½	130	Metal Case	1215	1152	1099	426	383	348	0.2	0.8
38 Special**+P	L38S2	23754	1 ½	125	Semi-Jacketed Hollow Point +P ‡	945	921	898	248	235	224	0.3	1.3
38 Special	L38S5	23724	1 ½	158	Lead Round Nose	755	739	723	200	191	183	0.5	2.1
	L38S11	23730	1 ½	130	Metal Case	800	787	775	185	179	173	0.3	1.7
10mm Auto	L10MM6	23706	2 ½	180	Metal Case	1150	1103	1063	528	486	451	0.2	0.9
357 SIG	L357S1	23734	5 ½	125	Metal Case	1350	1238	1146	506	425	365	0.2	0.7
	L357S2	23692	5 ½	125	Jacketed Hollow Point	1350	1245	1157	506	430	372	0.2	0.7
40 S&W	L40SW2	23694	5 ½	180	Jacketed Hollow Point	1015	986	960	412	388	368	0.3	1.1
	L40SW3	23742	5 ½	180	Metal Case	985	959	935	388	367	350	0.3	1.2
	L40SW4	23746	5 ½	165	Metal Case	1150	1089	1040	484	435	396	0.2	0.9
44 Remington Magnum**	L44MG7	23744	2 ½	180	Jacketed Soft Point	1610	1482	1366	1036	878	745	0.1	0.5
45 Auto	L45AP1	23818	2 ½	185	Metal Case	1015	981	951	423	395	371	0.3	1.1
	L45AP4	23726	2 ½	230	Metal Case	835	817	800	356	341	326	0.4	1.6
	L45AP7	23696	2 ½	230	Jacketed Hollow Point	835	817	800	356	341	326	0.4	1.6
45 GAP	L45GAP4	23691	2 ½	230	Metal Case	880	860	841	395	378	361	0.4	1.5

**Note: These ballistics reflect vented barrel. ‡Ammunition with "+P" on the case headstamp is loaded to higher pressure. Use only in firearms designated for this cartridge and so recommended by the gun manufacturer.

REMINGTON® TARGET SHOTSHELLS

Loads	Index IDI No.	Ramac No.	Gauge	Shell Length (in.)	Dram Equiv.	Velocity (ft./sec.)	Ounces of Shot	Shot Size	Rounds Per Box	Boxes Per Case	Rounds Per Case
Target Loads	STS12L7	20110	12	2 ¾	2 3/4	1145	1 1/8	7 1/2	25	10	250
	STS12L8	20112	12	2 ¾	2 3/4	1145	1 1/8	8	25	10	250
	STS12L85	20114	12	2 ¾	2 3/4	1145	1 1/8	8 1/2	25	10	250
	STS12L9	20116	12	2 ¾	2 3/4	1145	1 1/8	9	25	10	250
	STS12LH7	20250	12	2 ¾	3	1200	1 1/8	7 1/2	25	10	250
	STS12LH8	20252	12	2 ¾	3	1200	1 1/8	8	25	10	250

REMINGTON® RIMFIRE AMMUNITION (Packed 50 rounds per box, 100 boxes per case, 5000 rounds per case)

Product	Index IDI No.	Ramac No.	Wt. (g.)	Bullet Style	VELOCITY (ft./sec.)			ENERGY (ft./lbs.)			MID-RANGE TRAJECTORY (in.)		
					Muzzle	50 yds.	100 yds.	Muzzle	50 yds.	100 yds.	50 yds.	100 yds.	150 yds.
Subsonic (Long Rifle)	SUB22HP	21140	38	Hollow Point	1050	965	901	93	79	69	0.3	0.0	-7.7
	SUB22HP[1,2]	21141	38	Hollow Point	1050	965	901	93	79	69	0.3	0.0	-7.7
Target, Standard Velocity (Long Rifle)	6122	21022	40	Round Nose	1150	1048	976	117	98	85	0.2	0.0	-6.4
	6100[2]	21284	40	Round Nose	1150	1048	976	117	98	85	0.2	0.0	-6.4
Thunderbolt, Hi-Speed (Long Rifle)	TB-22A	21238	40	Round Nose	1255	1113	1017	140	110	92	0.0	0.0	-5.6
Cyclone, Hi-Speed (Long Rifle)	CY-22HP	21222	36	Hollow Point	1280	1117	1010	131	100	82	0.0	0.0	-5.6
Golden Bullet, High Velocity (Long Rifle)	1522	21006	40	Plated, Lead Round Nose	1255	1113	1017	140	110	92	0.0	0.0	-5.6
	1500[2]	21276	40	Plated, Lead Round Nose	1255	1113	1017	140	110	92	0.0	0.0	-5.6
	1622	21008	36	Hollow Point	1280	1117	1010	131	100	82	0.0	0.0	-5.6
	1600[2]	21278	36	Hollow Point	1280	1117	1010	131	100	82	0.0	0.0	-5.6
	1622C[3]	21250	36	Hollow Point	1280	1117	1010	131	100	82	0.0	0.0	-5.6
Golden Bullet, High Velocity (Short)	1022	21000	29	Round Nose	1095	982	903	77	62	52	0.3	0.0	-7.4
Yellow Jacket Hyper Velocity (Long Rifle)	1722	21074	33	Truncated Cone, Hollow Point	1500	1247	1075	165	114	85	-0.2	0.0	-4.1
	1700[2]	21280	33	Truncated Cone, Hollow Point	1500	1247	1075	165	114	85	-0.2	0.0	-4.1
Viper (Long Rifle)	1922	21080	36	Truncated Cone, Solid	1410	1198	1056	159	115	89	-0.1	0.0	-4.7
	1900[2]	21288	36	Truncated Cone, Solid	1410	1198	1056	159	115	89	-0.1	0.0	-4.7

[1] Line of sight used us 1 ½" above the axis of the bore. [2] These long rifle .22's available in slide-open plastic packs of 100 Rounds Per Box, 50 Boxes Per Case, 5000 Rounds Per Case. [3] Packed 525 Rounds Per Box, 12 Boxes Per Case, 6300 Rounds Per Case.

PREMIER® TACTICAL KNIVES

TANGO® SERIES I (FIXED)

Overall length – 10 ½" • Blade material – 5 ¼"; *Civilian:* 440C stainless steel PTFE-Teflon® (Polytetrafluoroethylene) coated blade with etched Remington® logo; *Law Enforcement:* 440C stainless steel mil spec: Mil-C 13924 blade with etched Remington® LE logo • Blade options – Drop, Clip and Tanto • Handle material – G-10 • Sheath – *Civilian:* Cordura; *Law Enforcement:* Modular Lightweight Load-Carrying Equipment (M.O.L.L.E.) • All sheaths come in Black • Made in Italy

Civilian
Drop

Law Enforcement
Clip

Law Enforcement
Tanto

Tango® Series I
Sheaths:

Cordura

M.O.L.L.E.

SPORTSMAN™ SERIES F.A.S.T.® (FIXED)

Blade material/options – 440 stainless steel with bead blast finish or black oxidized coating with a serrated/straight combo edge • Blade length – 5 ¾", 3.9mm thick • Handle material – Anodized aluminum scales with rubberized coating riveted to a solid one-piece, 3.9mm thick tang with lanyard hole • Black handle • Overall length – 10 ½" • Sheath – Heavy-duty black nylon sheath with belt loop

Stainless Steel Black Blade
Matte Black Handle

Stainless Steel Blade
Matte Black Handle

TANGO® SERIES II (FOLDER)

Closed measurement – 4 ¾" • Blade material – 3 ⅝"; *Civilian:* 440C stainless steel PTFE-Teflon® (Polytetrafluoroethylene) coated blade with etched Remington® logo; *Law Enforcement:* 440C stainless steel mil spec: Mil-C 13924 blade with etched Remington® LE logo • Blade options – Drop, Clip and Tanto • Handle material – G-10 • Made in Italy

SPORTSMAN™ SERIES F.A.S.T.® (FOLDER)

Blade material/options – 440 stainless steel with bead blast finish or black oxidized coating with a serrated/straight combo edge • Blade lengths – Large: 3 ⅝" | Medium: 3 ⅛" • Handle material – Anodized aluminum scales with rubberized coating; includes pocket clip and lanyard hole • Black handle • Closed measurement – Large: 5", Medium: 4 ⅛"

PREMIER TACTICAL SERIES I (FIXED) SHEATHS

Designed to fit fixed-blade knives of different sizes • Handle securing strap can secure various handle widths • Made of the best quality cordura material and will withstand rigorous use • Offered in 3 colors: Black, OD Green and Tan • Removable belt extension • Modular Lightweight Load-Carrying Equipment (M.O.L.L.E.) securing strap • Velcro® belt loop • Miscellaneous front pocket with removable closure • Kydex blade protector insert which can be removed for easy cleaning • Adjustable leg strap with rubberized weave to help hold in place while you are active • Tight weave cord for extra tie-down ability and/or additional uses

Remington® LAW ENFORCEMENT PRODUCTS

www.remingtonle.com

PREMIER® TACTICAL KNIVES

ZULU® SERIES I (FIXED)

Overall length – 10 ½" • Blade material – 4 ¾"; *Civilian:* 440C stainless steel PTFE-Teflon® (Polytetrafluoroethylene) coated blade with etched Remington® logo; *Law Enforcement:* 440C stainless steel mil spec: Mil-C 13924 blade with etched Remington® LE logo • Blade options – Drop, Clip and Tanto • Handle material – Anodized aluminum with 3M non-slip inserts • Sheath – *Civilian:* Cordura; *Law Enforcement:* Modular Lightweight Load-Carrying Equipment (M.O.L.L.E.) • All sheaths come in Black • Made in Italy

Zulu® Series I Sheaths:

Cordura

M.O.L.L.E.

Civilian Clip

Law Enforcement Drop

Law Enforcement Tanto

ZULU® SERIES II (FOLDER)

Closed measurement – 4 ¾" • Blade material – 3 ⅝"; *Civilian:* 440C stainless steel PTFE-Teflon® (Polytetrafluoroethylene) coated blade with etched Remington® logo; *Law Enforcement:* 440C stainless steel Mill Spec: Mil-C 13924 blade with etched Remington® LE logo • Blade options – Drop, Clip and Tanto • Handle material – Anodized aluminum with 3M non-slip inserts • Made in Italy

PREMIER® RESCUE KNIVES

ESCAPE™

Blade material – 440C stainless steel with Teflon® coating • Blade options – Single: 3 ½" Sheepfoot blade; Double: 3 ½" Sheepfoot blade and 3" push button automatic seat belt/web cutter • Handle material – Rugged, slip-resistant Forprene handle with glow-in-the-dark insets, solid one-piece, 4.5mm thick glass breaker and lanyard hole • Handle point of interest – Open back frame spine allows easy cleaning of knife • Handle options – Black or Olive Green; Double: Blade lock button in handle; Single: Pocket clip • Sheath – Heavy-duty Cordura sheath with Modular Lightweight Load-Carrying Equipment (M.O.L.L.E.) system • Made in Italy

Remington® LAW ENFORCEMENT PRODUCTS

www.remingtonle.com

GUN CARE

REM® OIL

Cleans dirt and grime from exposed metal surfaces while displacing non-visible moisture from metal pores • Protects internal and external metal parts from rust and corrosion • Exclusive Teflon® formula provides a thin, long-lasting film that keeps actions working smoothly by reducing metal-to-metal wear • Available in: 10 oz. aerosol can, 4 oz. aerosol can, 2 oz. bottle with child-resistant cap in footed clamshell and 1 oz. squeeze bottle in footed clamshell with child-resistant cap

REM® OIL WIPES

6" x 8" wipe cloth saturated with Rem Oil • Available in: 12 Count Clampack, 100 Count Display and 60 Count Pop-up Canister (with large 7" x 8" wipes)

40-X™ BORE CLEANER

Formerly Remington Bore Cleaner • 40-X name ties into the product's origins in precision benchrest shooting • Formulated for rifles to improve cleaning, accuracy and performance • Fast and easy to use – no soaking or foul odors • Available in: 2 oz. white oval bottle with child-resistant cap and 4 oz. squeeze bottle

REM® DRILUBE

Teflon®-based lubricant provides a tough, non-congealing film without the residue of dry graphite lubes • Keeps firearms functioning dependably to -40°F • Available in: 4 oz. aerosol can

REM® ACTION & SHOTGUN CLEANER

Easily cleans dirt, powder residue and caked-on lubricants from disassembled actions and fire-control mechanisms (Rem Action) • Dries quickly and leaves no residue (Rem Action) • Cleans trigger groups, gas ports, choke tube threading, receivers, chambers, barrels and magazine tubes (Shotgun) • Dissolves powder residue, fouled lubricants, burnt carbon deposits and gunk (Shotgun) • Blasts away gummy, caked-on grime from hard-to-reach areas such as ejectors, firing pin assemblies, trigger components and bolt recesses (Shotgun) • Available in: 10.5-oz. can with jet-spray extension tube (Rem Action) • Available in: 18-oz. aerosol can (Shotgun Cleaner)

BRITE BORE™ SOLVENT

Dissolves carbon and powder fouling, removes copper, lead and plastic deposits • Handy size for field range use • Low odor – contains no CFCs • Available in: 6 oz. can, 4 oz. jar and 2 oz. bottle

CLEANING PATCHES

For all shotguns, black powder guns, rifles and rimfire rifles • 100% cotton • Enclosed in polybag for easy carrying in the field • Pre-sized for optimum cleaning

MOISTUREGUARD REM® OIL

Uses Volatile Corrosion Inhibitor Technology • Guards your hunting, fishing and marine gear from rust and corrosion • Protects all metals from rust and corrosion • Displaces moisture • Lubricates, cleans and protects • Built from Rem Oil • Available in: 6 oz. spray pump

VCI TECHNOLOGY

MOISTUREGUARD GREASE

Uses Volatile Corrosion Inhibitor Technology • 6cc multi-purpose grease syringe • Safe on all metal surfaces • Instantly provides superior long-lasting lubrication and protection • Penetrates into smallest cracks and crevices

VCI TECHNOLOGY

MOISTUREGUARD REM® CLOTH

Uses Volatile Corrosion Inhibitor Technology • 10" x 10" multi-purpose cloth wipe • Instantly protects all metals from rust and corrosion

VCI TECHNOLOGY

FIREARM ACCESSORIES

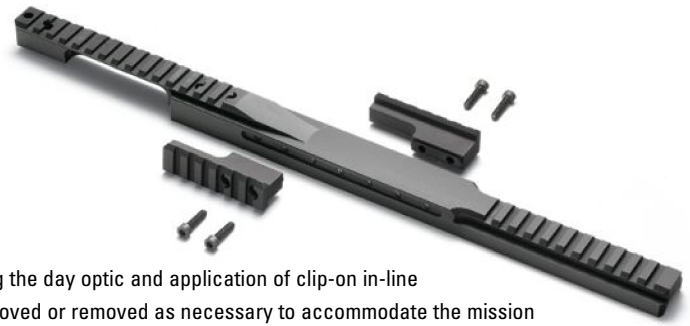

MARS (MODULAR ACCESSORY RAIL SYSTEM)

3-piece system that features a top rail for mounting the day optic and application of clip-on in-line night vision systems and 2 side rails that may be moved or removed as necessary to accommodate the mission and ancillary devices • Offered in both long- and short-action models to include degreed models • Comes complete with mounting screws, a Torx®/E wrench and instructions for mounting • May be used with any Remington 700™ based system such as the M24, 700P™ and 700P™ LTR

Model 870™ Police 12 gauge/14"
Parkerized Finish Modified with Bead Sight

POLICE EXTRA BARRELS

Original factory barrels with bead or rifle sights • Multiple choke constrictions • Durable factory finishes

MODEL 870 MAGAZINE EXTENSION KIT

Available in: 20" Parkerized (3 shot) • 18" Parkerized (2 shot) • 14" Parkerized (1 shot) • 20" Blued (3 shot) • 18" Blued (2 shot)

SHOTGUN SCOPE MOUNTS

Easy to install and lightweight • Perfect for adding magnification and the precision of scope sighting • Fits all Model 11-87,™ 1100™ and 870™ shotguns

MODEL 870™ & MODEL 11-87™ STOCK/FORE-END

Available in black synthetic

MODEL 700™ STOCK/FORE-END

Available in black synthetic

MODEL 7600™ KITS

Kits designed to specifically fit on Remington Model 7600™ rifles • Constructed of incredibly strong all-weather fiberglass reinforced synthetic • Complete with all hardware required for conversion

SHOTGUN RETENTION DEVICE

The Shotgun Retention Device (SRD™) is designed for use with any Remington® tactical shotgun. It allows the user to safely secure his weapon on a belt, body armor or even on any variety of hard surfaces. The SRD securely captures the shotgun using friction, which is user adjustable in addition to being ambidextrous. The SRD is constructed of an extremely durable thermo plastic and will deliver years of hard use.

Allows a Model 870™ to be held securely on the belt or body armor completely accessible for use • The SRD™ is made from highly durable Kydex that provides indefinite use • The SRD™ uses a friction retention system that can be adjusted by the user to suit his needs • The SRD™ is ambidextrous • For use with tactical shotguns • Can be mounted on tactical equipment, vehicles or any surface

Note: Unit is ambidextrous via the three mounting screws.

Remington® LAW ENFORCEMENT PRODUCTS
www.remingtonle.com

FIREARM ACCESSORIES

SUPERCELL™ RECOIL PAD

The absolute ultimate in shooter protection • A complex matrix of millions of advanced polymer Super Cells instantly soak up and redistribute energy over a longer time frame • Absorbs recoil more efficiently than any other pad in the world • Lightweight and tough • Enhanced with a smooth surface for rapid gun mounting • When fitted with the SuperCell pad, our pump gun now kicks less than their semi-auto, with up to 54% less felt recoil • Fits most Remington® synthetic rifle and shotgun stocks

ADJUSTABLE LENGTH OF PULL KIT

Kit Includes: Two ¼" LOP spacers • One ½" LOP spacer • Corresponding screw lengths to accommodate 3 different lengths • Full 1" of adjustment

INTEGRAL SCOPE MOUNTS (MEDIUM & HIGH)

Fits 30mm scope tube without inserts or 1" with inserts (High) • Fits 1" scope tube only (Medium) • Z-2 alloy construction – 50% stronger than aluminum • Super strong design – base & lower ring all in one (High) • Secure attachment – Torx® grade 8 tactical screws • Fits all Remington Model 700Ps • Available in black or silver • Made in the USA

1" Inserts

High Integral Scope Mounts (Black)

Medium Integral Scope Mounts (Silver)

Visit www.remington.com for additional firearm accessories products offered by Remington.

MODEL 11-87™ GAS SYSTEM KIT

Genuine factory replacement parts • Nickel-plated piston/piston seal • Teflon®-coated barrel seals

UNIVERSAL MAGAZINE CAP

Fits all 12, 16 and 20 gauge Model 870s, Model 1100s and Model 11-87s • Allows you to add a sling to your Remington shotgun

CENTERFIRE MAGAZINES

Model 700P™

Model 7600P™

REMINGTON ARMORER'S SCHOOL

Our mission is to train LE personnel to repair and maintain the Remington firearms used by their officers, with courses limited to LE, government or military personnel only. Our instructors have years of combined experience, and courses are presented at requested locations in the U.S., Canada and internationally. In-depth training includes:

- » Disassembly and reassembly
- » Inspection
- » Troubleshooting
- » Service and repair
- » Factory authorized modifications

FIELD COURSES

- » Two-day course for the Model 870P
- » One-day course for the Model 11-87P
- » One-day course for the Model 700P or Model 7600P

FACTORY COURSES

- » A comprehensive 4-day factory school held only in Ilion, N.Y., for the Model 870P and 11-87P shotguns; Model 700P and 7600P series rifles

For more information, visit www.RemingtonLE.com/training or give us a call at 315-895-3352 or fax us at 315-895-3661.

LAW ENFORCEMENT ONLINE ARMORY

Dedicated to providing the best Law Enforcement products and service, we have developed an online source for official armory members. Specialized information from Remington experts, including new product updates, technical bulletins and detailed parts information are just some of the features available on the site. Online registration forms for the Armorer's School, as well as downloadable Remington Law Enforcement catalogs, brochures and flyers are also available. So visit www.RemingtonLE.com to gain access to the largest source of Remington Law Enforcement information available online.

300, ADL, Accelerator, BDL, Bandit, Bore, BriteBore, Bronze Point, BuckHammer, Bullet, CBEE 22, CDL, Classic, Conquest, Copper-Lokt, Copper Solid, Core-Lokt, Custom Carry, Cyclone, D-Series, Deer Hunter, Disintegrator, DriLube, Driving Band, Duplex, Echo, Elite Hunter, ETA, EtronX, Excursion, Express, Express-Steel, EZ, F.A.S.T., Fast Action Soft Touch, Fieldmaster, Figure 8, Fireball, Flexitab, G3, Gamemaster, Genesis, Green Color, Golden, Golden Saber, Grizzly, Gun Club, Hi-Speed, Ideal, Kleanbore, Lead-Lokt, LV SF, M24, M24A2, M24A3, MAX Gobbler, M-Series, Managed-Recoil, Marine Magnum, MCS Picatinny, Model Five, Model Seven, Model 105 CTi, Model 11-87, Model 11-87P, Model 32, Model 332, Model 365, Model 40-X, Model 40-XB, Model 40-XBBR, Model 40-XC, Model 40-XR, Model 40-XRBR, Model 40-XS, Model 412, Model 504, Model 504-T, Model 552, Model 572, Model 597, Model 673, Model 700, Model 700P, Model 700P USR, Model 710, Model 750, Model 770, Model 798, Model 799, Model 830, Model 870, Model 870 MCS, Model 870P, Model 870P MAX, Model 1100, Model 7400, Model 7600, Model 7600P, Model 7615, Model 7615P, Model SP-10, Nitro 27, Nitro CLP, Nitro Mag, Nitro Turkey, Nitro-Steel, Parker, Peters, Pheasant, Power-Lokt, Power Piston, Premier, ProBore, Quick Look, R, R-P, R3 and R3 logo, Rangemaster, Ready, Realwood, Rem, Rem Dri 35, Rem DriLube, RemCloth, RemGrip, Rem-Line, Rem-Lite, Rem-Tech, Remington, Remington Fieldmaster, Remington Law Enforcement, Remington Leadless, Remington Racing, Remington Shooting School and Remington Shooting School logo, Remington Targetmaster, Remington Ultra, Rustless, S.A.S.S., Sendero, ShurShot, Slugger, SP, SPR, SPR18, SPR100, SPR210, SPR22, SPR220, SPR310, SPR310S, SPR453, SPR94, SPS, SP-T, SPS-T, Speedmaster, Sportsman, STS, Subsonic, Super Magnum, SWIFT-LOKT, TAC 8, Tango, Targetmaster, Thunderbolt, TorchCam, TriNyte, Ultra Bonded, Ultra Mag, UMC, Unibody, Viper, VLS, Vortex and Vortex logo, VS, VSF, VS SF, Weathermaster, Wetproof, Wingmaster, Wingmaster HD, Woodsmaster, XCR Extreme, X-Mark Pro, XR-100, Yellow Jacket and Zulu are trademarks of RA Brands, L.L.C., Madison, NC 27025. Badger Ordnance is a trademark of Badger Ordnance. Palusol is a trademark of BASF. V-Tac is a trademark of Blackhawk Products Group. Briley is a trademark of Briley Manufacturing. Bushnell and Sharpshooter are trademarks of Bushnell. Delrin, Kevlar, Teflon and Tyvek are trademarks of DuPont. Sierra Match King is a trademark of Sierra Bullet Co. Swift, A-Frame and Scirocco are trademarks of Swift Bullet Co. Break-Up, Brush, Duck Blind, Mossy Oak, New Break-Up and Obsession are trademarks of Haas Outdoors, Inc. Hardigg is a trademark of Hardigg Industries, Inc. V-Max is a trademark of Hornady Manufacturing Company, Harris is a trademark of Harris Bipod, Hogue is a trademark of Hogue, Inc. Advantage, Advantage Max-4, Advantage Timber, AP, APG, HD and Realtree are trademarks of Jordan Outdoor Enterprises, Ltd. BreachersGrip, CompStock Recoil Reducer and SpecOps are trademarks of Knoxx Industries, LLC., Leupold is a trademark of Leupold & Stevens, Inc. McMillian is a trademark of McBros Rifle Co. Butler Creek and Uncle Mike's are trademarks of Michaels of Oregon Co. Lapua is a trademark of Nammo Lap XS Sight Systems, Inc. HiViz is a trademark of North Pass, Ltd. Nightforce is a trademark of Nightforce Optics, Pelican is a trademark of Pelican Products, Inc. Kraton is a trademark of Shell. Sako is a trademark of Sako, Ltd., Shilen is a trademark of Shilen, Inc., Speedfeed is a trademark of Speedfeed, Inc. LimbSaver is a trademark of Steven Sims, Inc. TRUGLO is a trademark of Truglo, Inc. Skyline, Excel and Fall Flight are trademarks of Skyline Cover, LLC. Turner AWS is a trademark of Turner Saddlery. Weaver is a trademark of Weaver Outdoor Optics. Williams and Fire Sights are trademarks of Williams Gun Sight Co.

Weights, stock dimensions, checkering pattern and wood grain may vary according to the individual firearm. Remington reserves the right to change or modify its products without notice. Pricing may vary by model, specification, color, size and availability. Follow the safety rules printed in firearms instruction books and on ammunition boxes. If you do not have an instruction book for your Remington firearm, write to Remington Arms Company, Inc., Military, Law Enforcement, Technologies and Federal Agency Sales Divisions, 870 Remington Drive, PO Box 700, Madison, NC 27025, for a free copy or visit our website at www.remington.com/manuals. Please specify the model and serial number. The firearms herein have been photographed with their actions closed to properly showcase their features. In actual practice, any firearm not in use must be left with ammunition removed, action open and safety on. Consumer Information, Arms Service, Parts and Repairs and Custom Shop: (800) 243-9700. Visit us on the web at: www.remingtonle.com.

OUR MISSION.

Remington® is committed to the men and women serving our country in roles of distinction within the Military, Federal Agency, and Law Enforcement communities. Our mission is to provide seamless, time-sensitive support to government entities seeking our products and to develop new products that meet the needs of these customers as requirements change. We will do this by fielding a professionally trained and supported staff who are technical experts in our products and in the small arms marketplace, well educated in how to get you what you need through government acquisition processes, and responsive to your needs and desires.

Remington® LAW ENFORCEMENT PRODUCTS

www.remingtonle.com

Remington®

REMINGTON ARMS Company, Inc.
Law Enforcement Sales Division

870 Remington Drive
P.O. Box 700
Madison, NC 27025-0700
Phone: 336-548-8899
Fax: 336-548-7800

www.remingtonle.com

REMINGTON LAW ENFORCEMENT®

Ammunition represented in this catalog is produced by Remington Arms Co., Inc., at an ISO9001:2000 Registered Facility located in Lonoke, Arkansas.Remington longarms are manufactured to the highest quality and performance standards, providing reliability, safety, performance, durability, and long service life.

©2011 Remington Arms Company, Inc.
RM2124